FORM 2-7048b-9 (6-63)

STANDARDS CODE	CIRCUIT AND PACKAGING STANDARD		SYM	DATE	CHANGE NO.	TECH APPRO	SYM	DATE	CHANGE NO.	TECH APPRO	DEVELOPMENT NO.	6/16
2-7048	APPROVAL	DATE		2-25-64	DEV1056							
CARD CODE				2-25-64	161332						5803122	
3122												

SHEET 4 OF 4

RESTRICTED

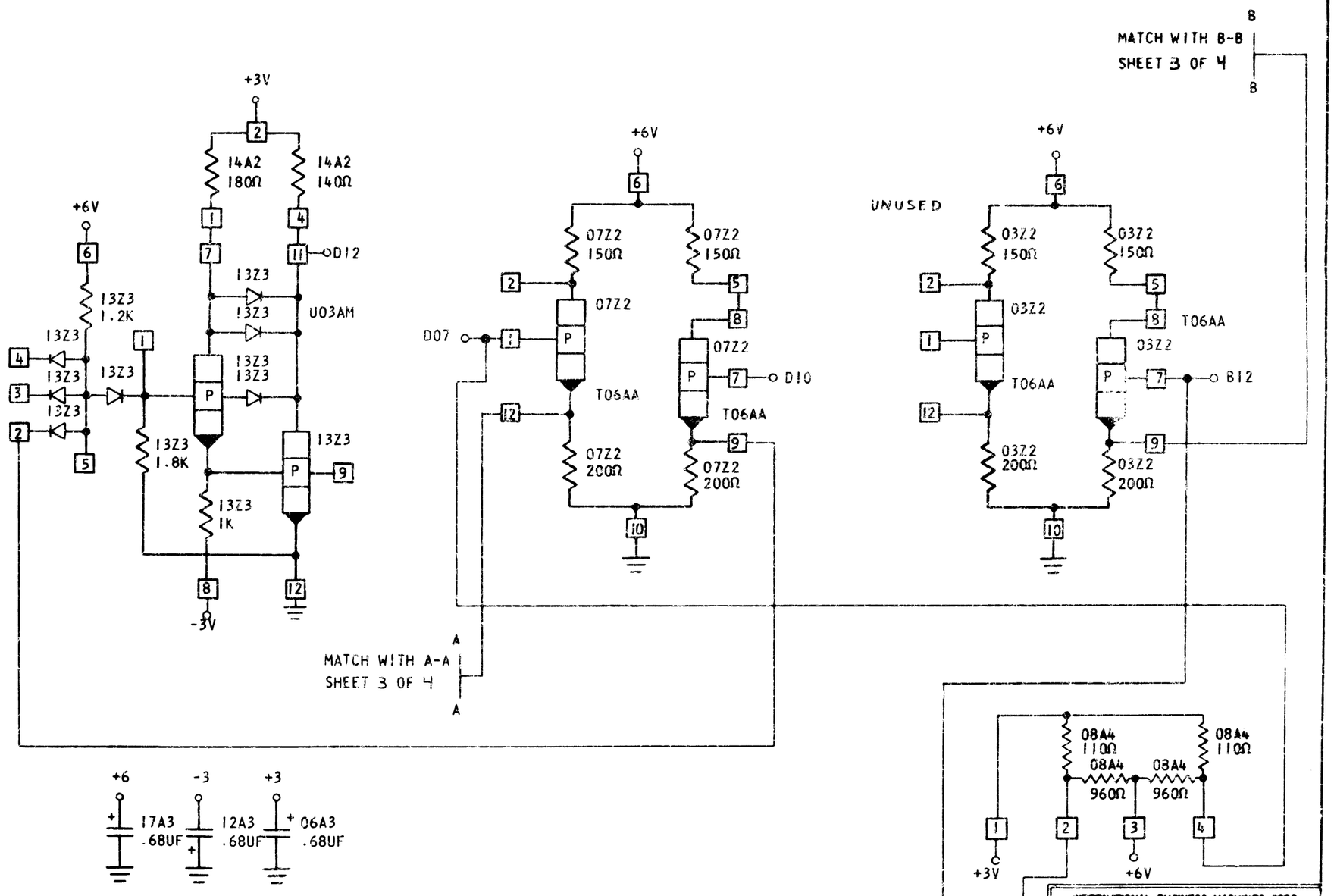

INTERNATIONAL BUSINESS MACHINES CORP				
NAME	CARD ASM -1-2-3+3 WAY AND INV 2-2 WAY AND-OR-INV			
DESIGN	VG	6-29-63	TYPE	2070
DETAIL	VG	6-29-63	SCALE	NONE
CHECK	EF	7-2-63	DRAW	VE 8-15-64
APPRO			CHECK	725 8-1-64

C 5803122