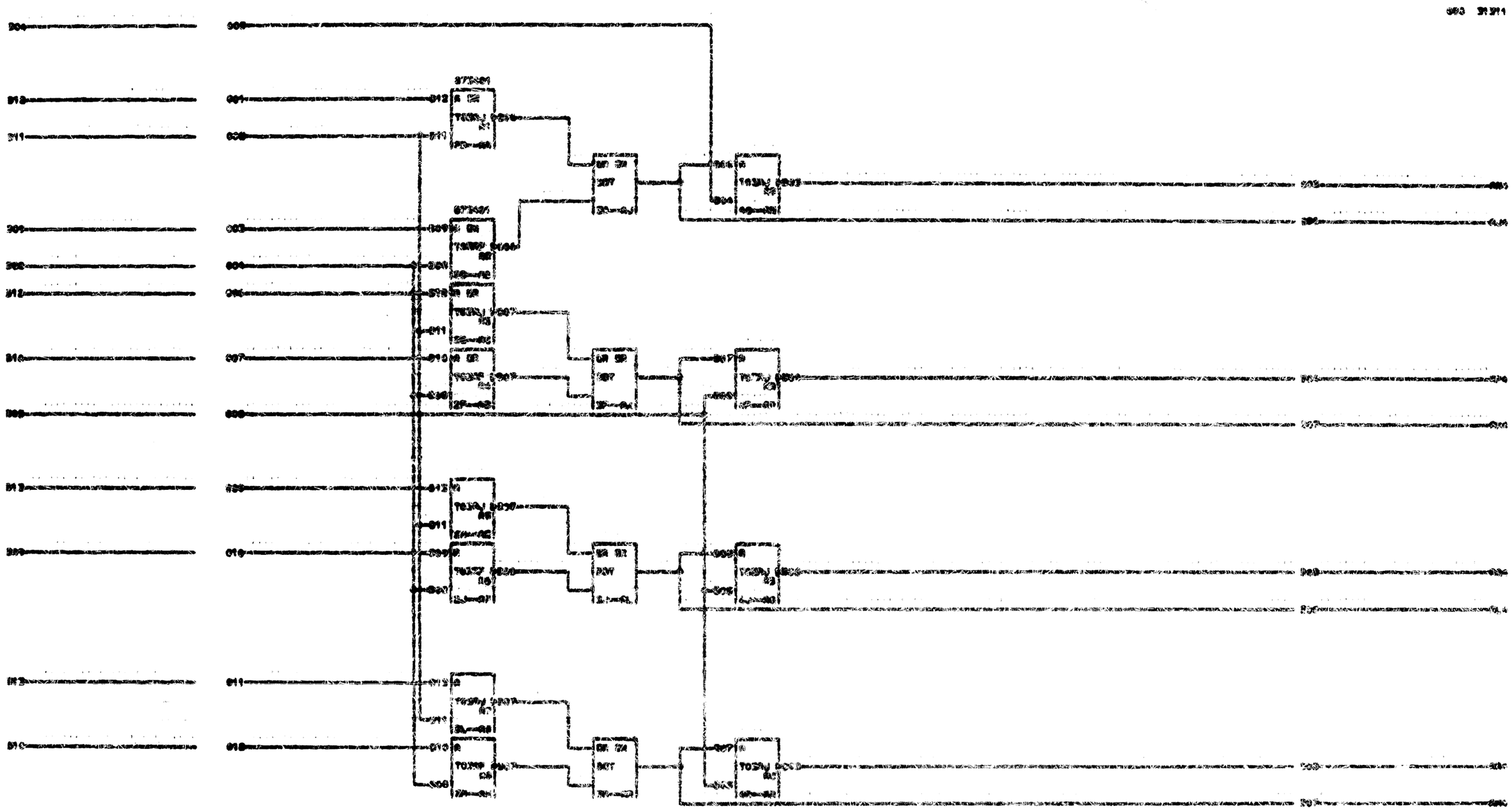

RESTRICTED

01-14-66 DEV 2284
06-14-66 [illegible]