STANDARDS CODE	CHECKS AND PACKAGING STANDARD		SYM	DATE	CHANGE NO.		SYM	DATE	CHANGE NO.		DEVELOPMENT NO.	S/M
2-7049	APPROVAL	DATE		1-14-64	DEV 2264							
CAL CODE				4-14-64	160171						5803131	
3131											SHEET 3 OF 4	

RESTRICTED

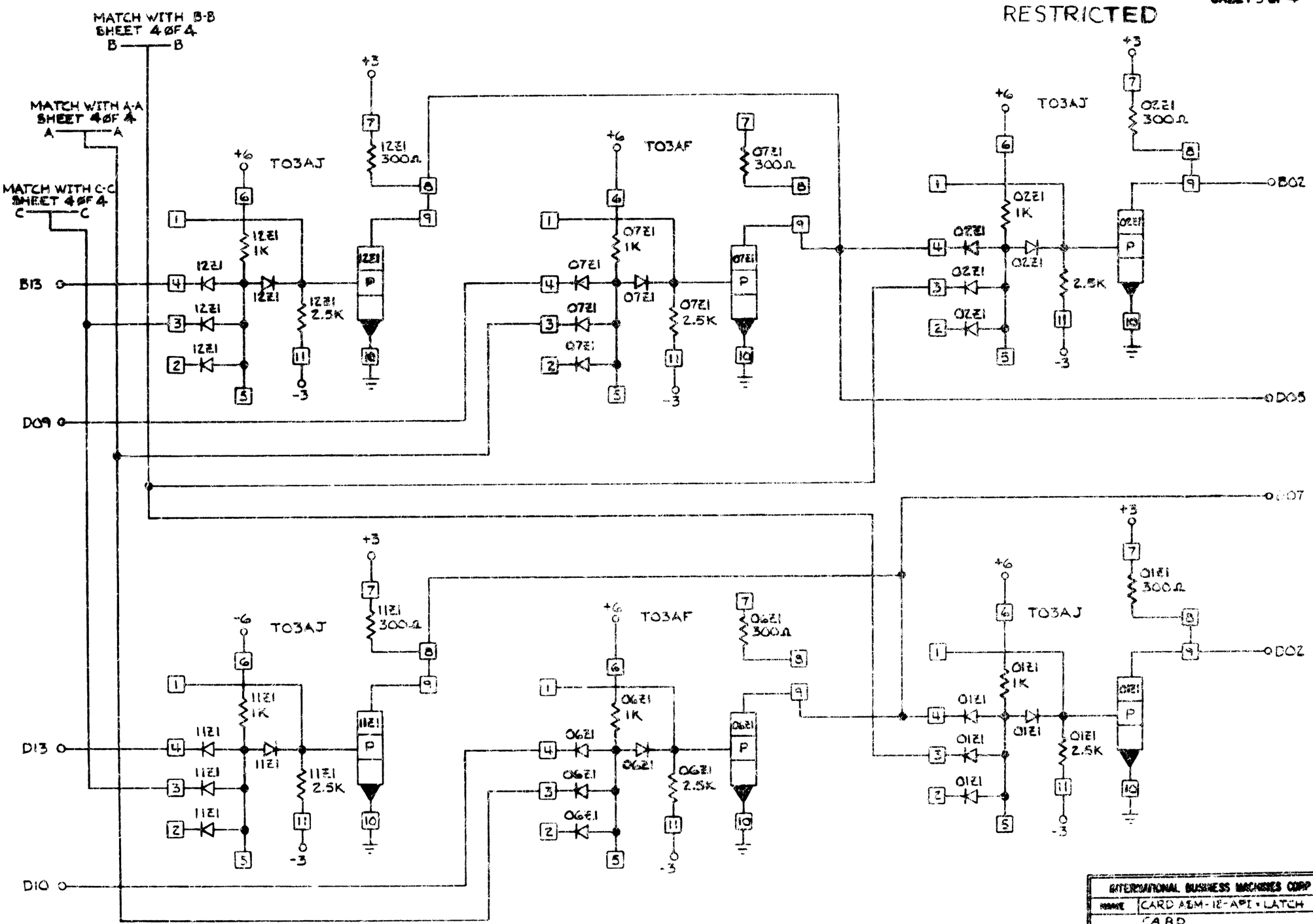

INTERNATIONAL BUSINESS MACHINES CORP				
NAME	CARD ASM-12-APT-LATCH			
	CARD			
DESIGN	ADKD	1-5-64	TYPE	250
DETAIL	ADKD	1-5-64	SCALE	NONE
CHECK	ADKD	1-6-64	DRAW	
APPROV	RBS	1-7-64	CHECK	

C 5803131