FORM 2-7045-6 (6-63)

STANDARDS CODE	CIRCUIT AND PACKAGING STANDARD		SYM	DATE	CHANGE NO	TECH APPRO	SYM	DATE	CHANGE NO	TECH APPRO	DEVELOPMENT NO	Q/M
2-7045				5-1-64	DEV 3038							
CARD CODE	APPROVAL	DATE		7-30-64	61081						5803144	
3144												

SHEET 5 OF 5

RESTRICTED

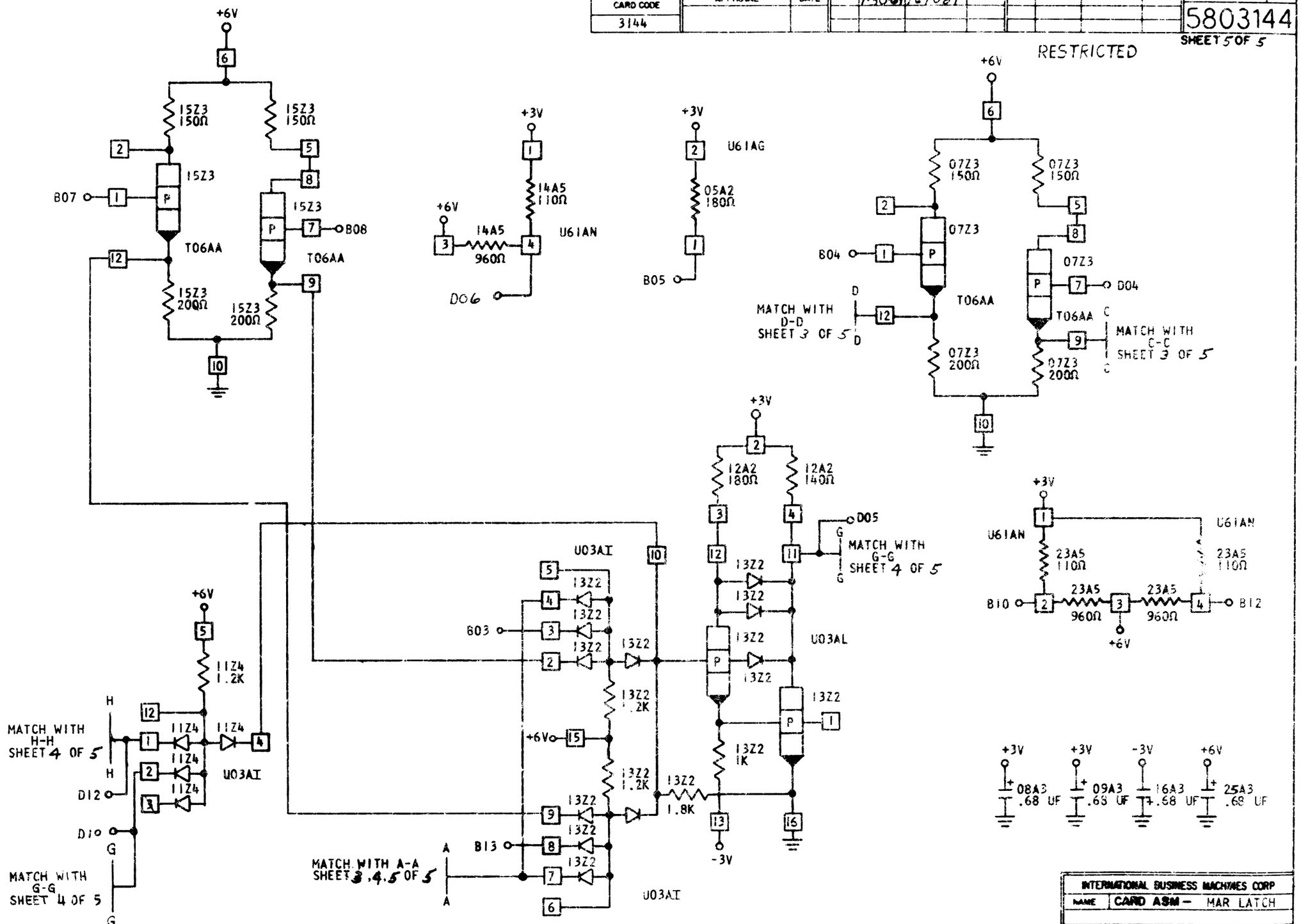

INTERNATIONAL BUSINESS MACHINES CORP				
NAME	CARD ASM – MAR LATCH			
DESIGN	CDA 3-2-64		TYPE	2070
DETAIL	CDA 3-2-64		SCALE	NONE
CHECK	CDA 3-2-64		DRAW	VE 8-17-64
APPRO			CHECK	DLH 8-24-64

C 5803144