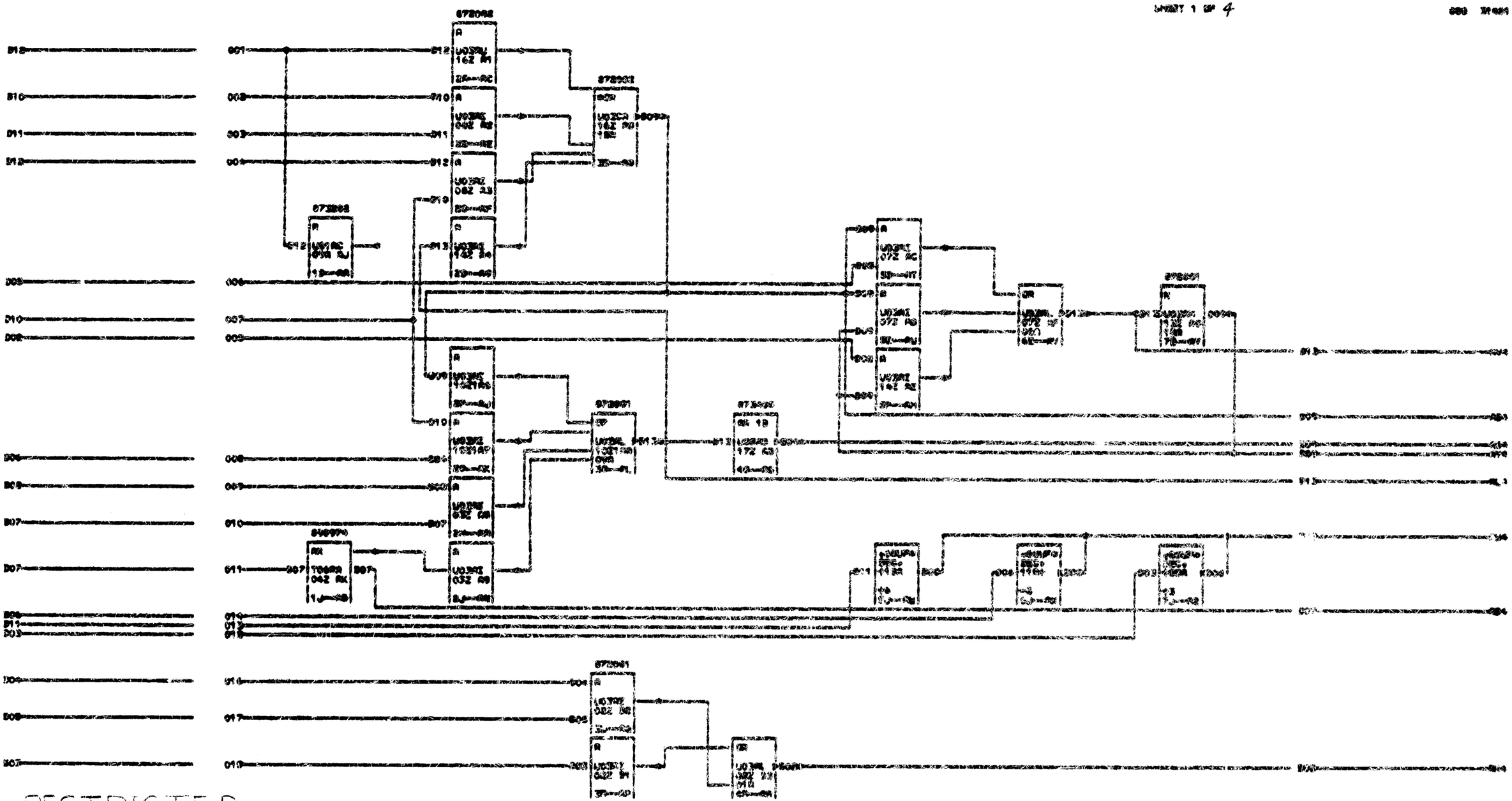

RESTRICTED