5803149

STANDARDS CODE 2-7945

RESTRICTED

CARD CODE 3149 | 5803149

SHEET 5 OF 5

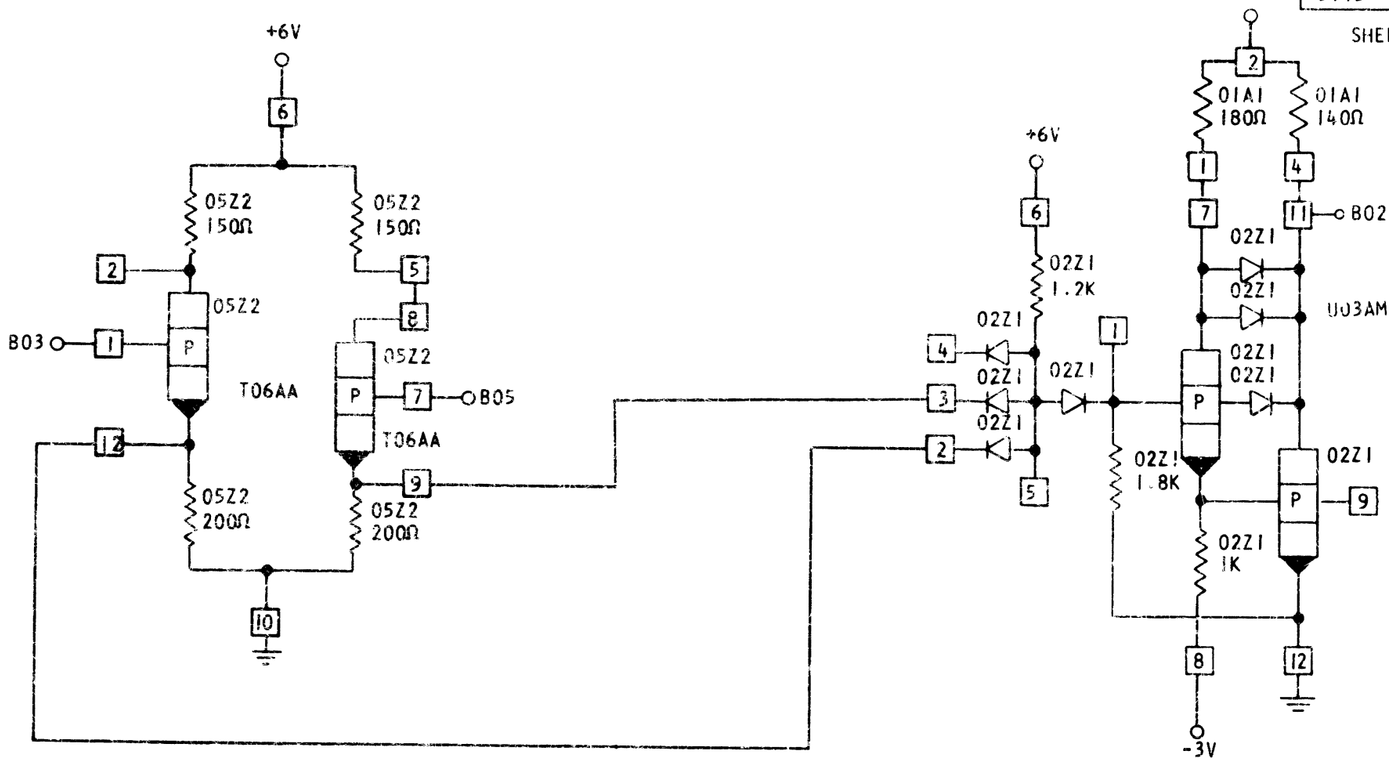

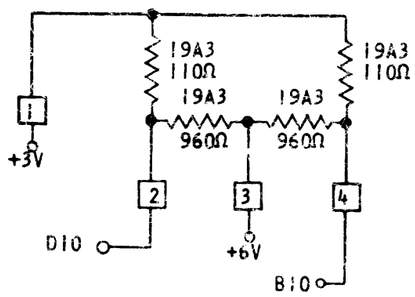

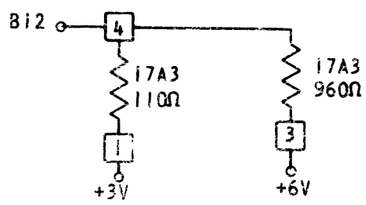

UNUSED

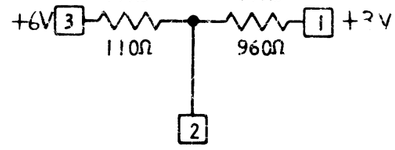

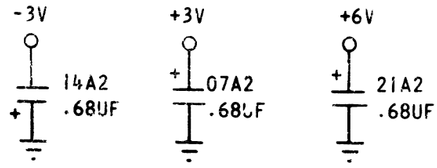

CIRCUIT AND PACKAGING STANDARD	
APPROVAL	DATE

INTERNATIONAL BUSINESS MACHINES CORP.						DATE	CHANGE NO.	APPROVAL	DATE	CHANGE NO.	APPROVAL	DEVELOPMENT NO.	5803149
NAME	CARD ASM-SHIFTER POWER TWO					10-10-63	DEV1732						
DESIGN	GT	7-15-63	MODEL	2070		7-23-64	160825						
DETAIL	WM	7-15-63	SCALE										
CHECK	GT	8-23-63	DRAW	VE	8-4-64								
APPRO	MJR	10-3-63	CHECK	GJM	5-11-67								

C

C.B. CO., NO 27010 46106

FORM 83 001