FORM 2-7045-6 (6-63)

STANDARDS CODE	CIRCUIT AND PACKAGING STANDARD		SYM	DATE	CHANGE NO.	TECH APPRO	SYM	DATE	CHANGE NO.	TECH APPRO	DEVELOPMENT NO.	O/M
2-7045				2-20-64	DEV1887							
CARD CODE	APPROVAL	DATE		9-11-64	161494						5803160	
3160												

SHEET 4 OF 4

RESTRICTED

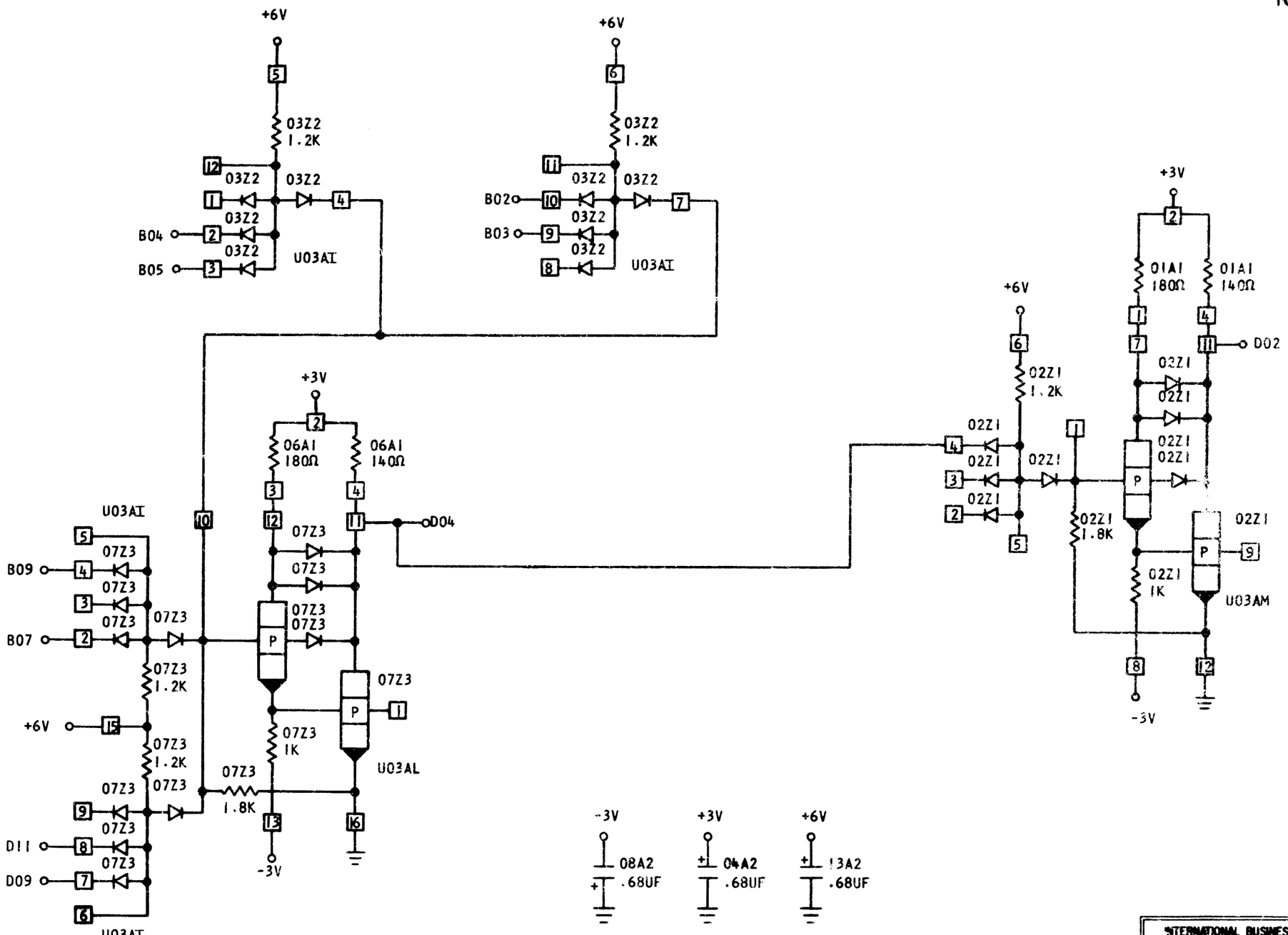

INTERNATIONAL BUSINESS MACHINES CORP					
NAME	CARD ASM — 2-4 WAY AOI				
DESIGN	GT	8-1-63	TYPE	2070	
DETAIL	WW	8-1-63	SCALE	NONE	
CHECK	GT	8-1-63	DRAW	VE	8-29-64
APPRO			CHECK	TLS	9-22-64

C 5803160