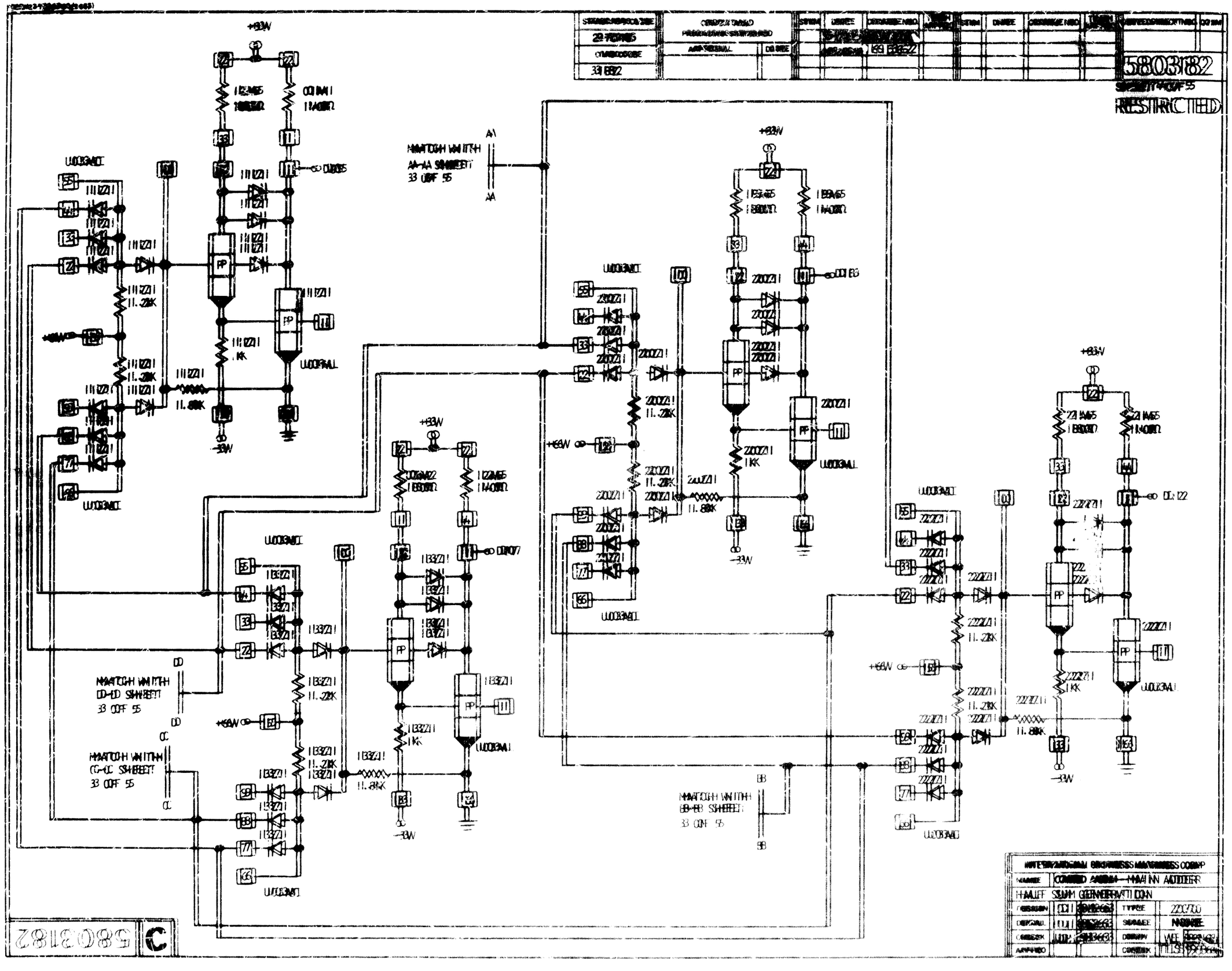
5803182
RESTRICTED
+83W
-3W
+66W
MATCH WITH
AA-AA SHEET
33 OF 55
MATCH WITH
DD-DD SHEET
33 OF 55
MATCH WITH
CC-CC SHEET
33 OF 55
MATCH WITH
BB-BB SHEET
33 OF 55
11.28K
11.88K
1K
5803182