THIS QLD HAS BEEN HAND CHECKED AGAINST THE WIRING

SHEET 01 OF 4

000 31961

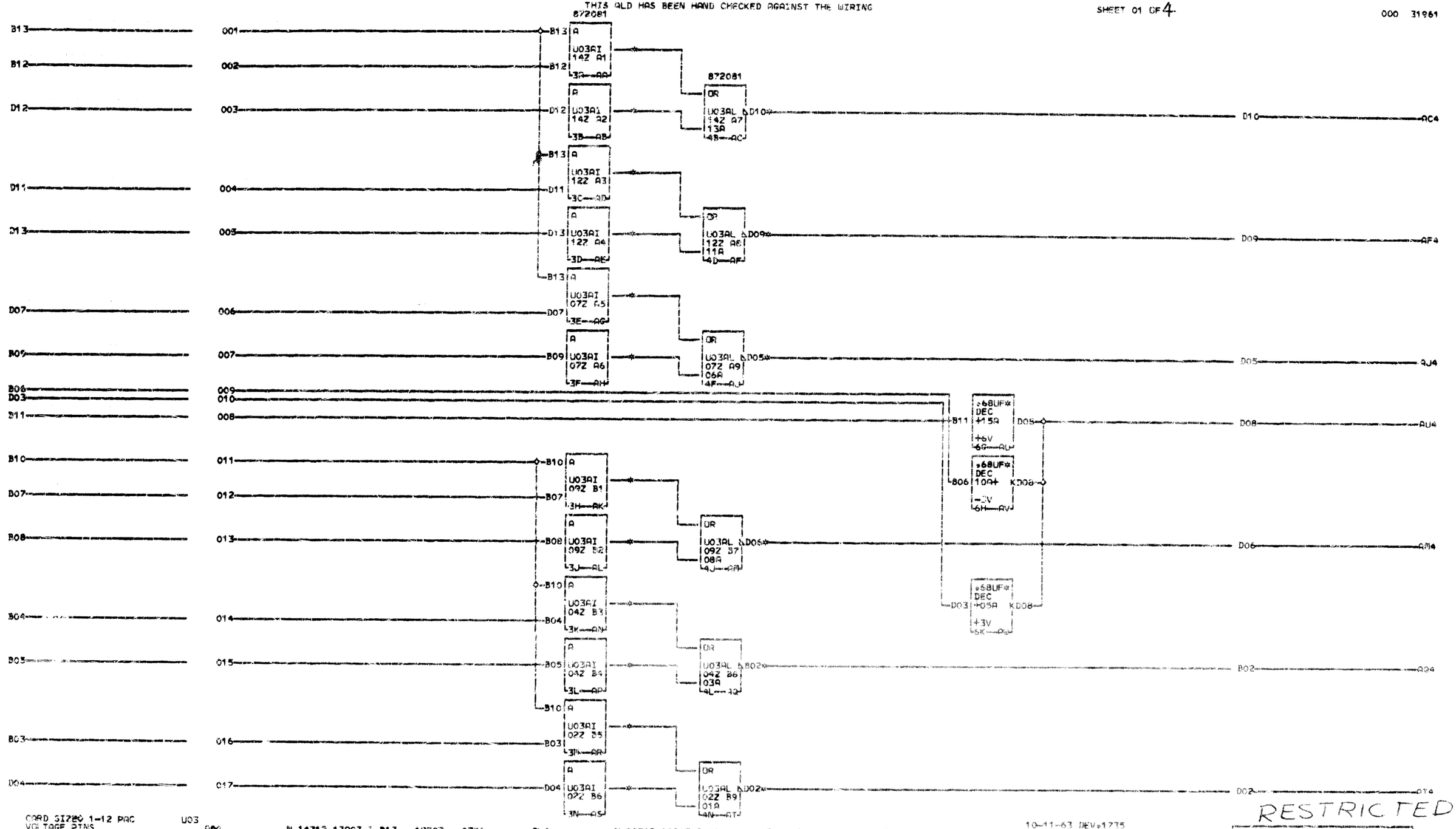

CARD SIZE 1-12 PAC
VOLTAGE PINS
3 +6V0811 +3V0D03
1 -3V0B06 GND0D08
9 STANDARD RESTRICTED
6
1

000

U03

| | | |