FORM 2-7045-6 (2-63)

STANDARDS CODE	CIRCUIT AND PACKAGING STANDARD		SYM	DATE	CHANGE NO.	TECH APPRO	SYM	DATE	CHANGE NO.	TECH APPRO	DEVELOPMENT NO.	Q/M
2-7045				2-24-64	1883							
CARD CODE	APPROVAL	DATE		9-11-64	161497							
3198											5803198	

SHEET 3 OF 4

RESTRICTED

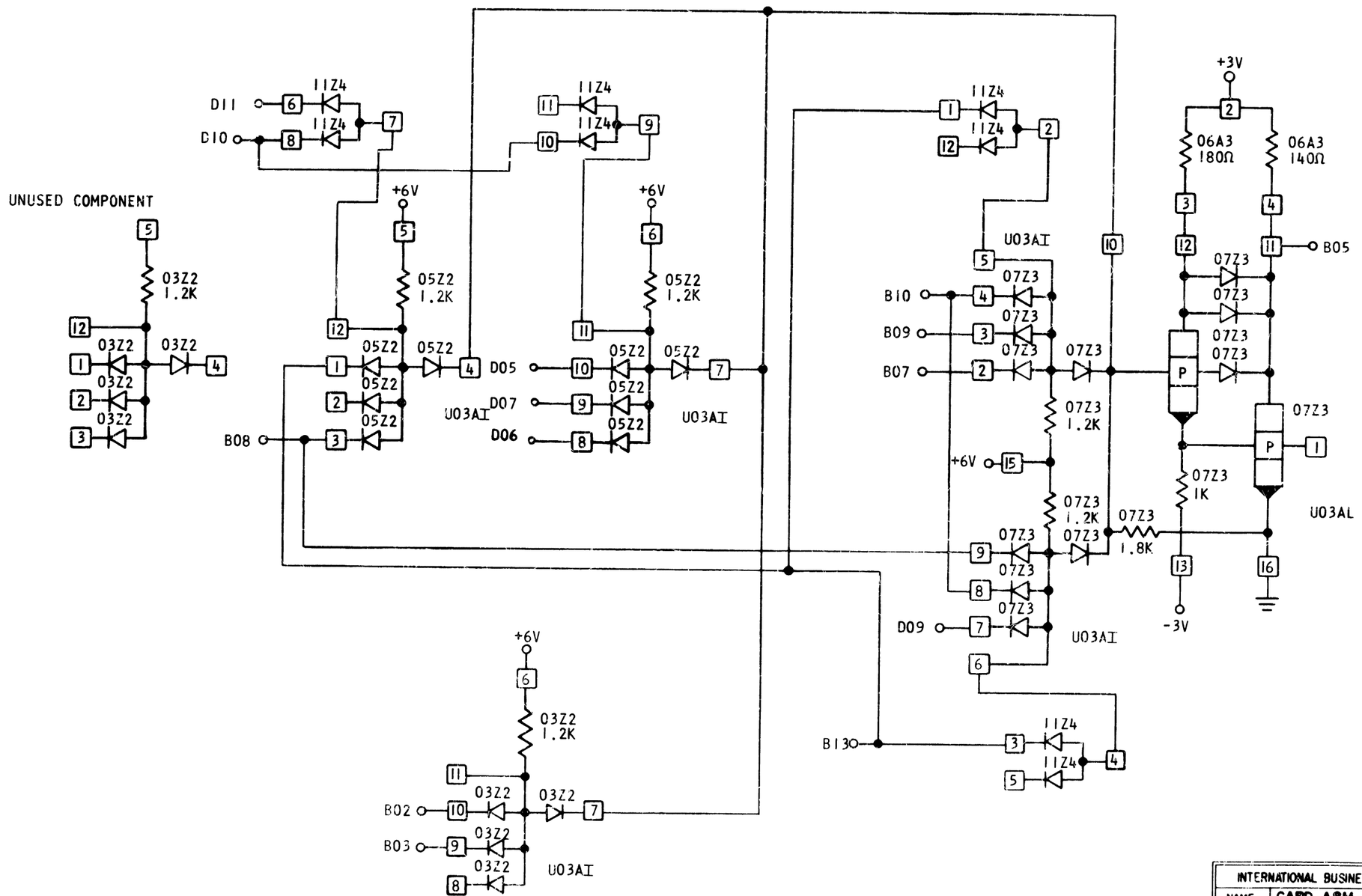

INTERNATIONAL BUSINESS MACHINES CORP					
NAME	CARD ASM — ONE-FIVE WAY LATCH 2-2 WAY AI				
DESIGN	IDI	8-28-63	TYPE	2070	
DETAIL	IDI	8-28-63	SCALE	NONE	
CHECK	JPH	8-30-63	DRAW	VE	8-28-64
APPRO			CHECK	RLS	9-9-64

C 5803198