STANDARDS CODE	CARD CODE	5803211
2-6236	3211	

5803211

SHEET 5 OF 5

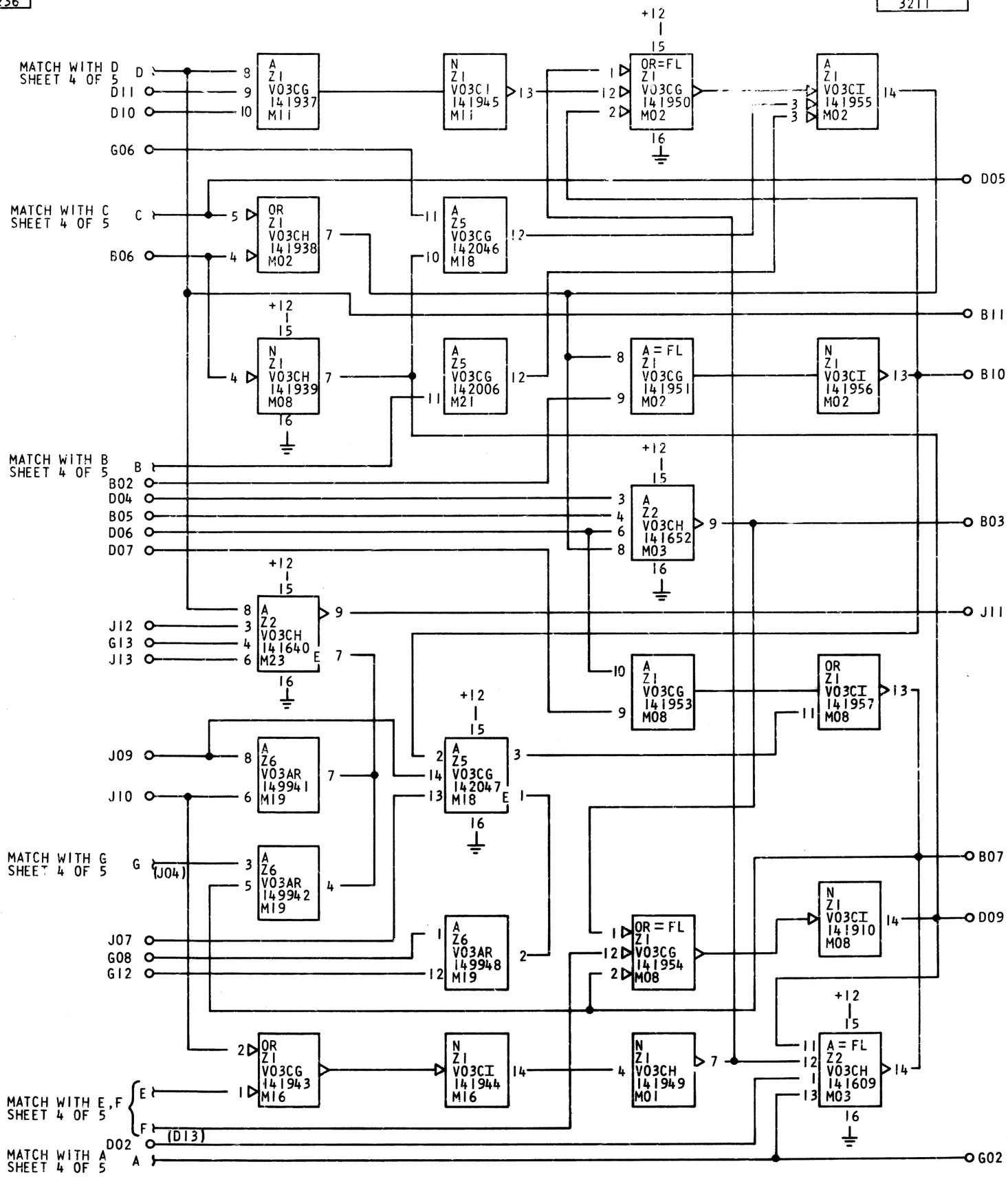

UNUSED COMPONENTS

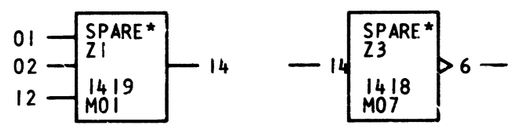

NOTE

X VOLTAGE
GND - D08,J08 ARE BUSSED
+12 - D03,J03 ARE BUSSED

CIRCUIT AND PACKAGING STANDARD	
APPROVAL	DATE
PEM	7MAR68

INTERNATIONAL BUSINESS MACHINES CORP.																	
NAME	LOAD MTU							DATE	CHANGE NO.		APPROVAL	DATE	CHANGE NO.		APPROVAL	DEVELOPMENT NO.	5803211
								21JAN69	177201	A							
DESIGN	FL	30JAN64	MODEL														
DETAIL	FL	30JAN68	SCALE	NONE													
CHECK	PG	28FEB68	DRAW	VE	19FEB68												
APPRO	PEM	7MAR68	CHECK														

C

GRAPHIC CONTROLS CORP. BROOKLYN, N.Y. 11237 STOCK NO. N1007 1963
ASC-5277-0 REV. 0 7800987100