FORM 2-7045-S (8-63)

STANDARDS CODE	CIRCUIT AND PACKAGING STANDARD		SYM	DATE	CHANGE NO	TECH APPRO	SYM	DATE	CHANGE NO	TECH APPRO	DEVELOPMENT NO	G/M
2-7045				10-30-63	DEV 2130							
CARD CODE	APPROVAL	DATE		07-28-64	160968							
3216											5803216	

SHEET 4 OF 5

RESTRICTED

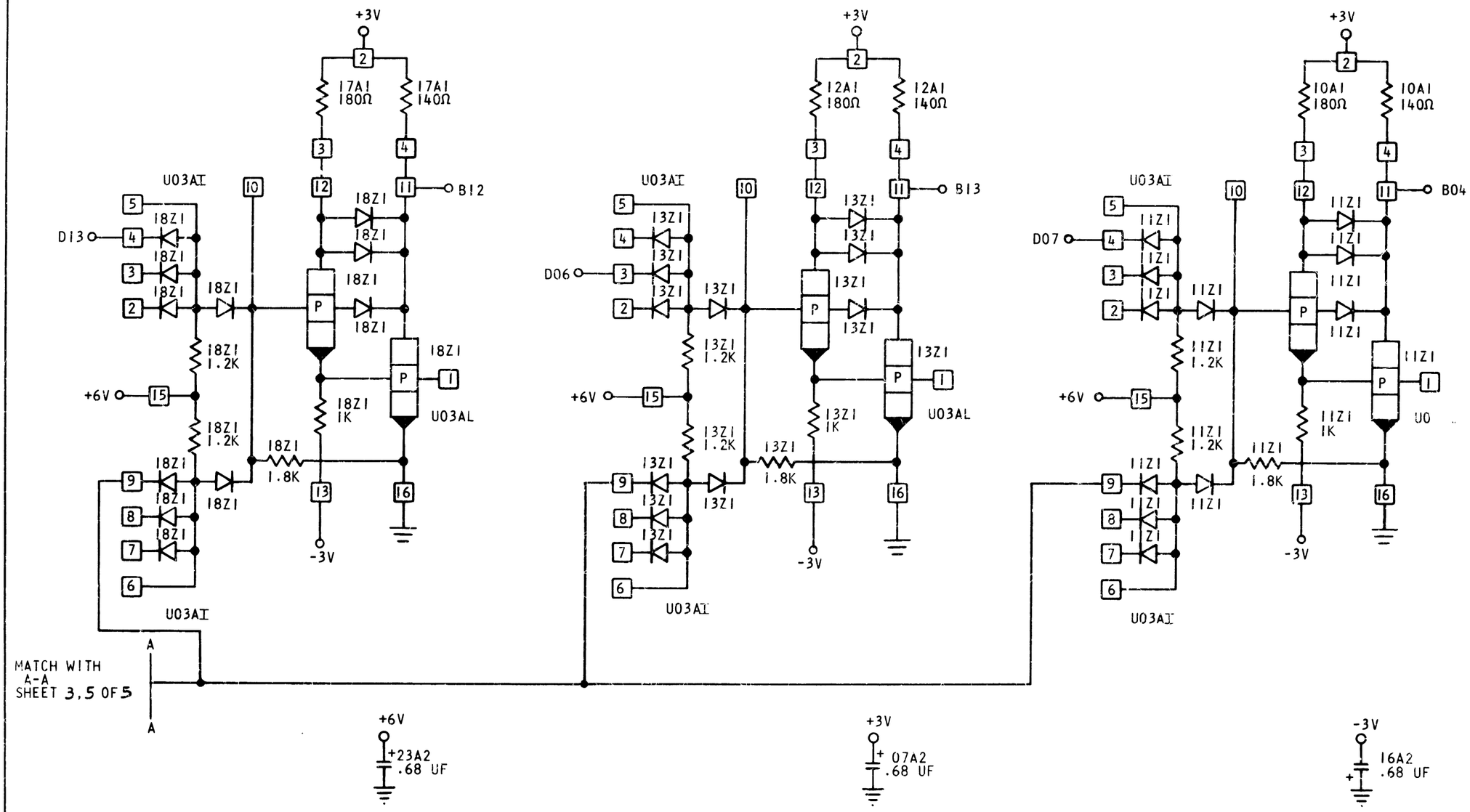

INTERNATIONAL BUSINESS MACHINES CORP					
NAME	CARD ASM – SCAN GATE				
DESIGN	EJS	8-20-63	TYPE	2070	
DETAIL	EJS	8-20-63	SCALE	NONE	
CHECK	EJS	8-20-63	DRAW	VE	8-15-64
APPRO	WJR	10-30-63	CHECK	TLS	8-24-64

C 5803216