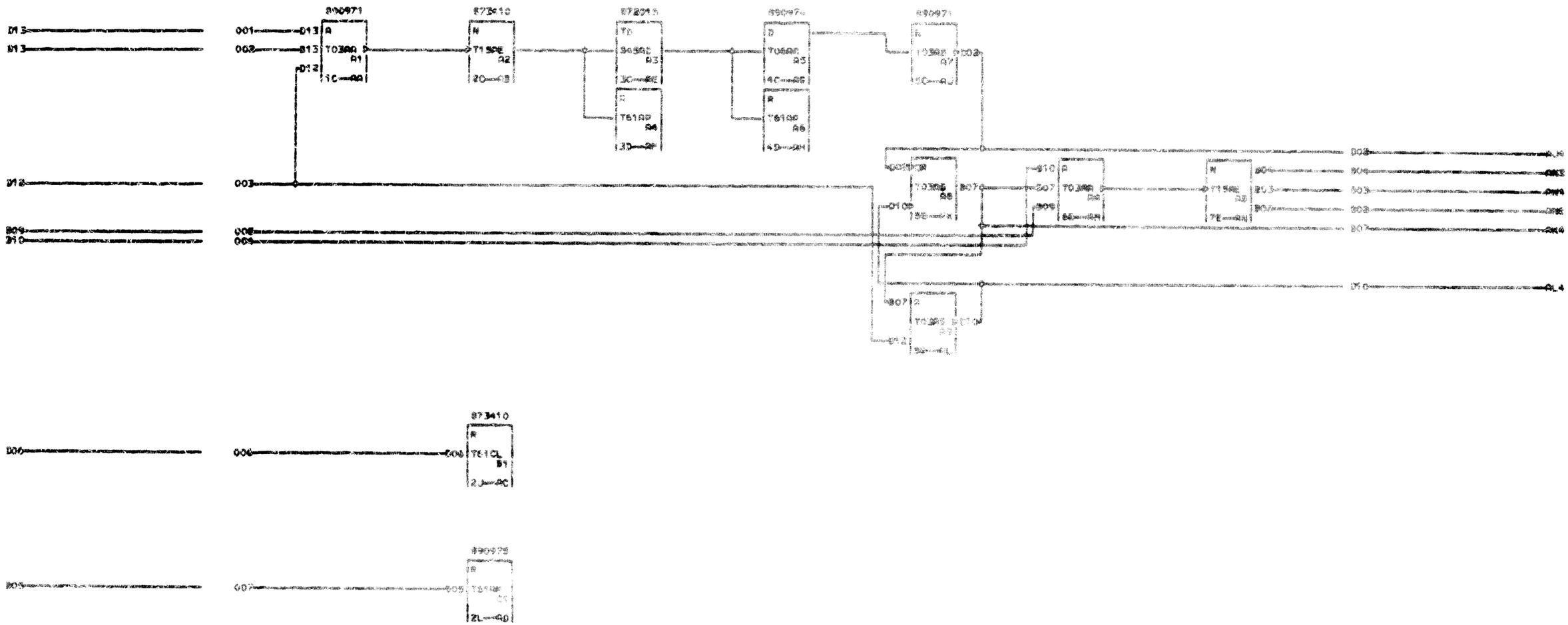

CARD SIZED 1-48 PDC 545
VOLTAGE PINS
3 +4V5011 +3V6003
2 -3V6006 -6V2006
1 STANDARD RESTRICTED

RESTRICTED

DELAY LINE CLOCK DRB

DATE MAY 30 1962 MECH. ASSEMBLY
LOG 180 PAGE
CD PG 1 OF 1 PAGE DRB 1253
ISR CORP. FD BLK. 29