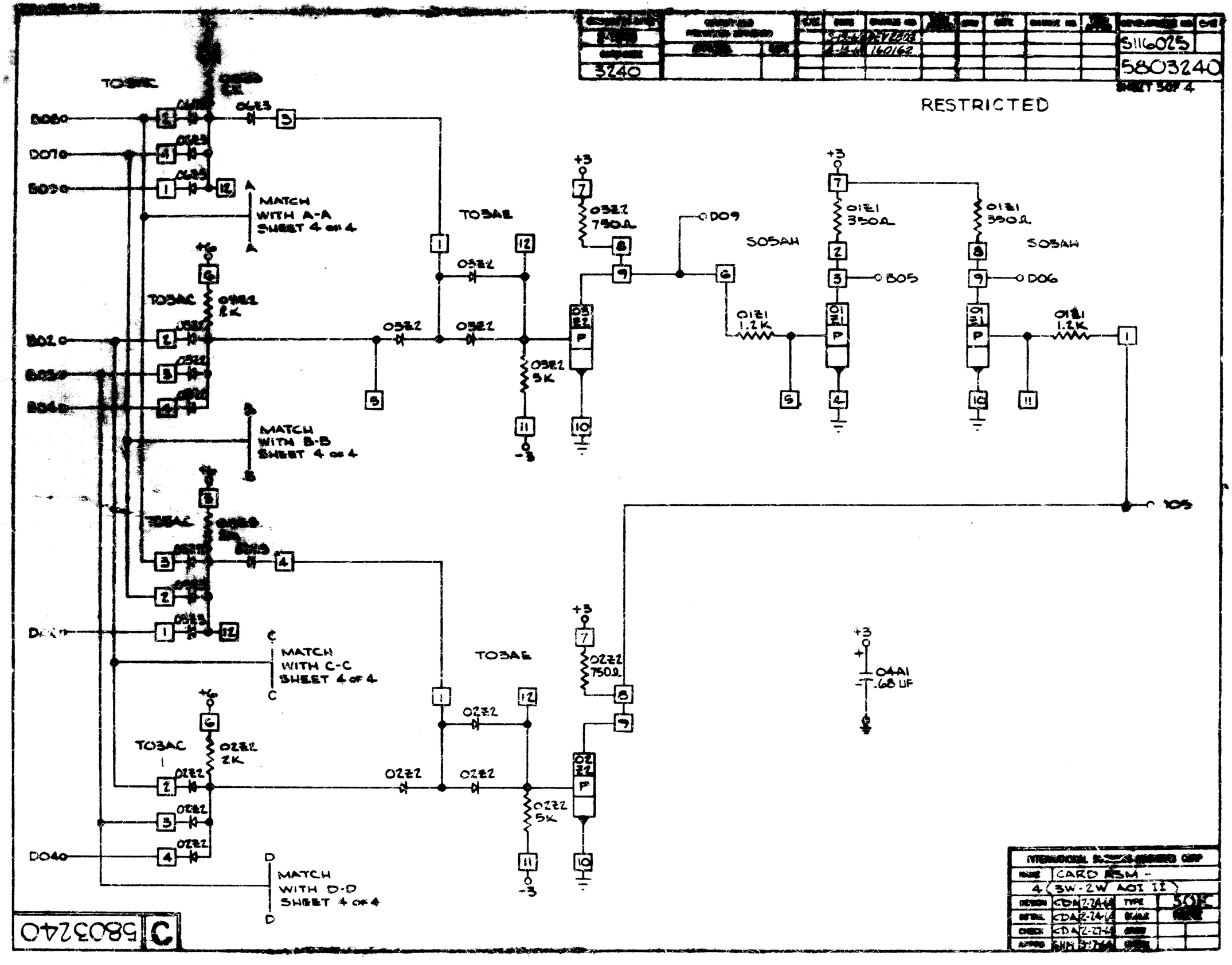
3240
S116025
5803240
SHEET 3 OF 4
RESTRICTED
TO3AC
D080
D070
B030
MATCH WITH A-A SHEET 4 OF 4
TO3AC
B020
B030
B040
MATCH WITH B-B SHEET 4 OF 4
TO3AC
D040
MATCH WITH C-C SHEET 4 OF 4
TO3AC
D040
MATCH WITH D-D SHEET 4 OF 4
TO3AE
TO3AE
+3
-3
D09
B05
D06
SO5AH
SO5AH
+3
.68 UF
CARD ASM -
4 (3W-2W AOI II)
5803240
C