STANDARDS CODE	CIRCUIT AND PACKAGING STANDARD		SYM	DATE	CHANGE NO	TECH APPRO	SYM	DATE	CHANGE NO	TECH APPRO	DEVELOPMENT NO	Q/M
2-7045					DEV2438							
CARD CODE	APPROVAL	DATE		8-25-63	161176						5803245	
3245												

SHEET 5 OF 5

RESTRICTED

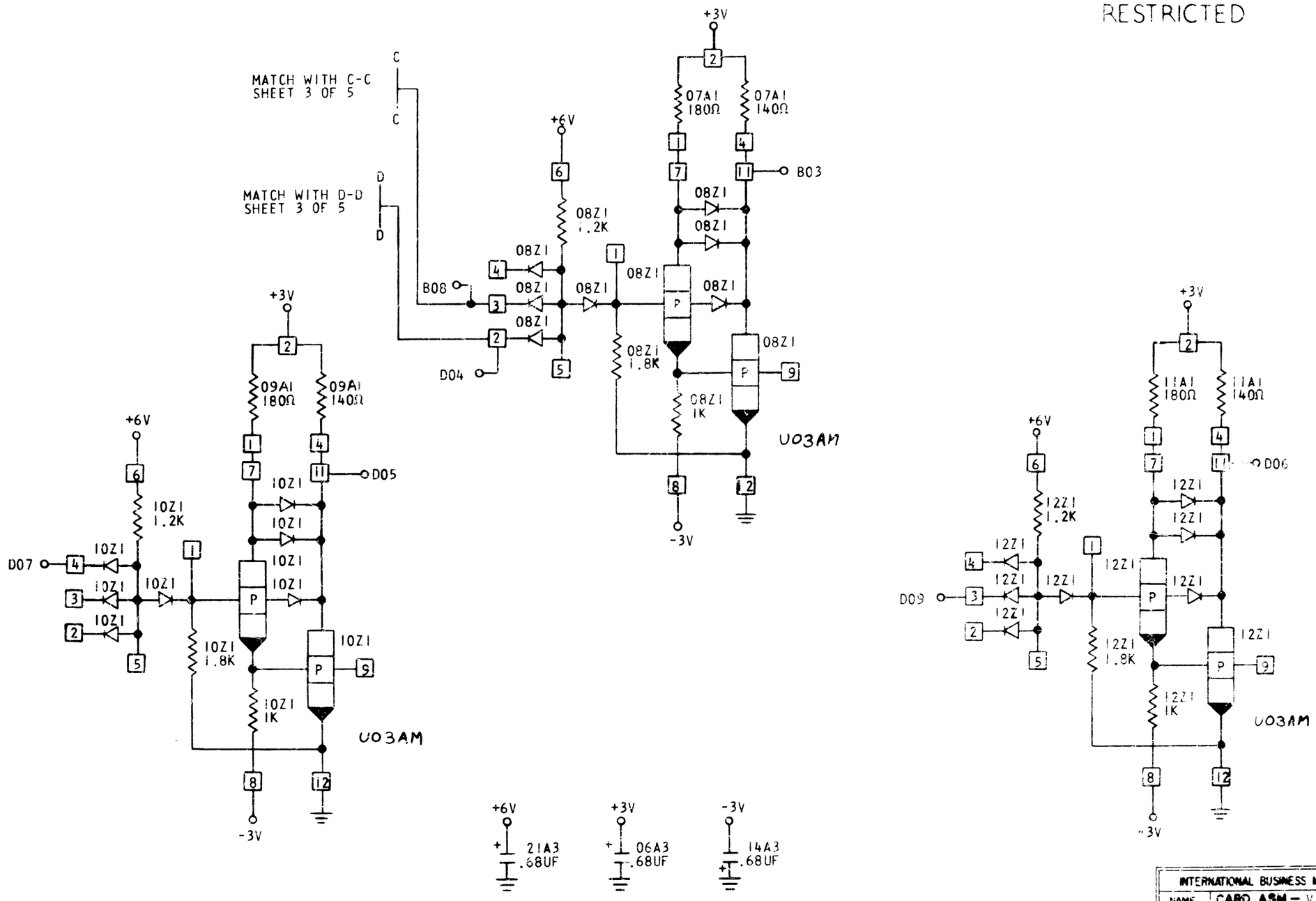

INTERNATIONAL BUSINESS MACHINES CORP				
NAME	CARD ASM – V.F.L. DIGIT			
GATE +4 INVERTERS				
DESIGN	VWG 8-14-63	TYPE	2070	
DETAIL	NTS 8-14-63	SCALE	NONE	
CHECK	TJZ 8-20-63	DRAW	VE 18-2-64	
APPRO	RBS 12-9-63	CHECK	TZS 19-3-64	

C 5803245