STANDARDS CODE 2-6235

5803278

CARD CODE 5803287

SHEET 3 OF 5

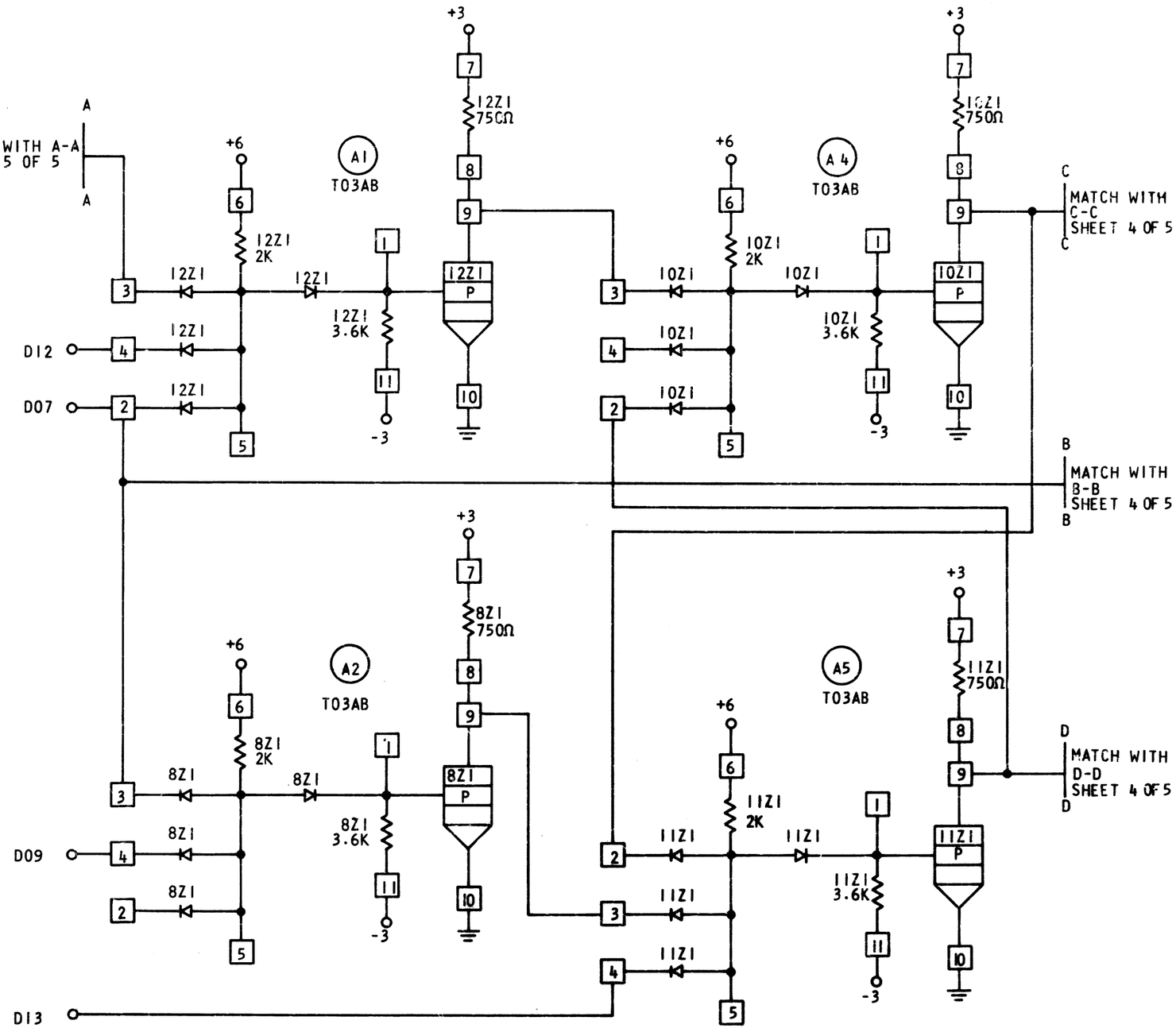


| CIRCUIT AND PACKAGING STANDARD | |
|---|---|
| APPROVAL | DATE |
| | |

| | | | | | | | | | | | | | | | | | | | |
|---|---|---|---|---|---|---|---|---|---|---|---|---|---|---|---|---|---|---|---|
| INTERNATIONAL BUSINESS MACHINES CORP. | | | | | | | | DATE | CHANGE NO. | | APPROVAL | DATE | CHANGE NO. | | APPROVAL | DEVELOPMENT NO. | 5803287 |
| NAME | CARD ASM-UNIT FREE GENERATOR | | | | | | | 13DEC63 | DEV2348 | | | | | | | | |
| | | | | | | | | 8JUN65 | DEV2805 | | | | | | | | |
| DESIGN | IDI | 8OCT63 | MODEL | 2002 | | | | 8FEB65 | 165034 | A | | | | | | | |
| DETAIL | IDI | 8OCT63 | SCALE | NONE | | | | 6JUN68 | 166712 | B | | | | | | | |
| CHECK | JDH | 30CT63 | DRAW | VE | 10SEP68 | | | | | | | | | | | | |
| APPRO | RBS | 3DEC63 | CHECK | JL | 16OCT68 | | | | | | | | | | | | |

C

GRAPHIC CONTROLS CORP., BROOKLYN, N. Y. 11237 STOCK NO. N8907 1969
82C-6877-0 MRO # 780528106