RESTRICTED

STANDARDS CODE	CIRCUIT AND PACKAGING STANDARD		SYM	DATE	CHANGE NO.	TECH APPRO	SYM	DATE	CHANGE NO.	TECH APPRO	DEVELOPMENT NO.	Q/M
2-7045				4-17-64	DEV2452							
CARD CODE	APPROVAL	DATE		7-24-64	160827						5803298	
3298												

SHEET 4 OF 5

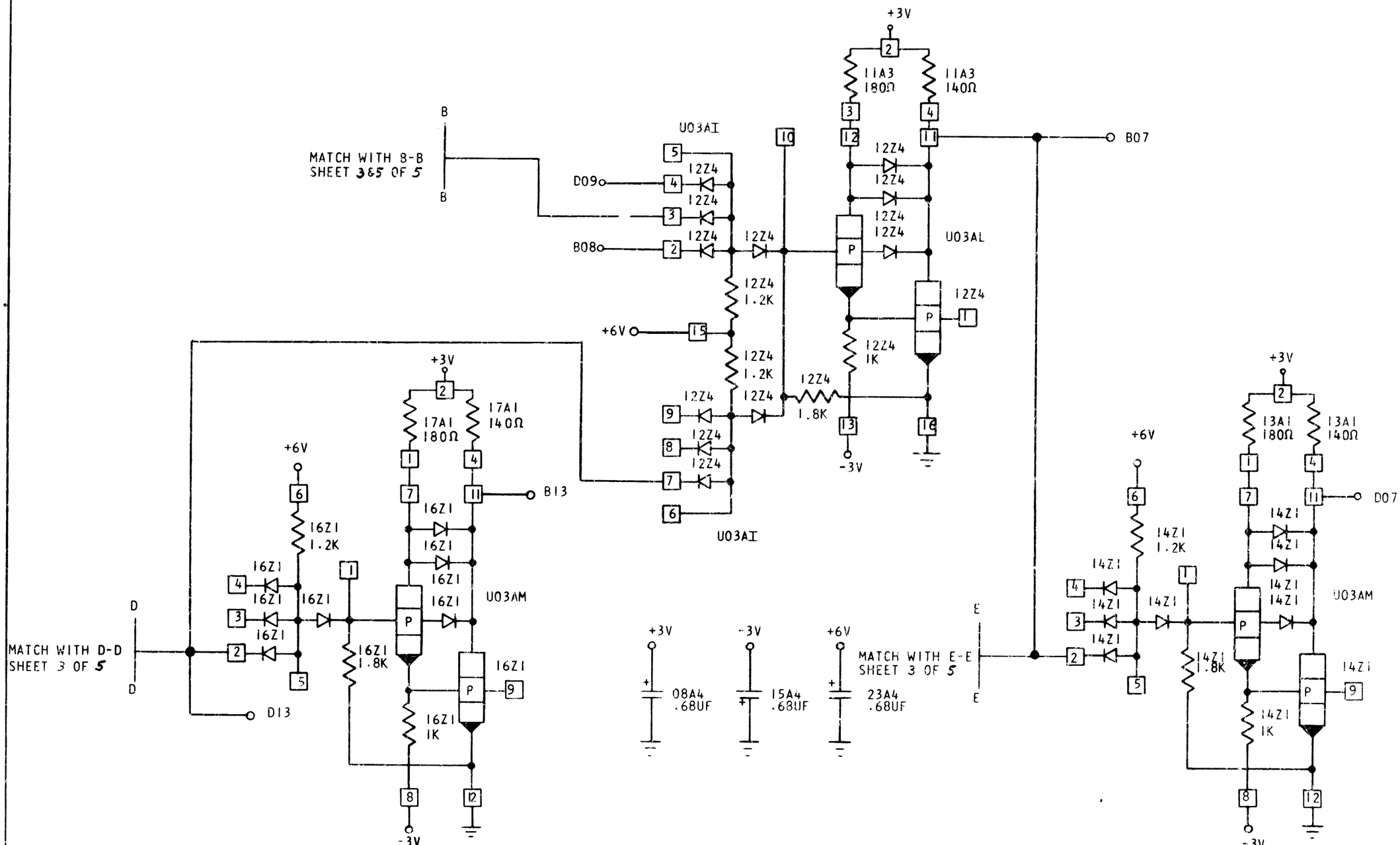

INTERNATIONAL BUSINESS MACHINES CORP				
NAME	CARD ASM – SEQ TGR			
+ EOP	+ LCOP			
DESIGN	C&D	10-15-63	TYPE	2070
DETAIL	C&D	10-15-63	SCALE	NONE
CHECK	C&D	10-17-63	DRAW	VE 8-18-64
APPRO			CHECK	DLH 8-28-64

C 5803298