3300				12-13-63								5803300	
				5-25-64	1604B5								

RESTRICTED

SHEET 4 OF 4

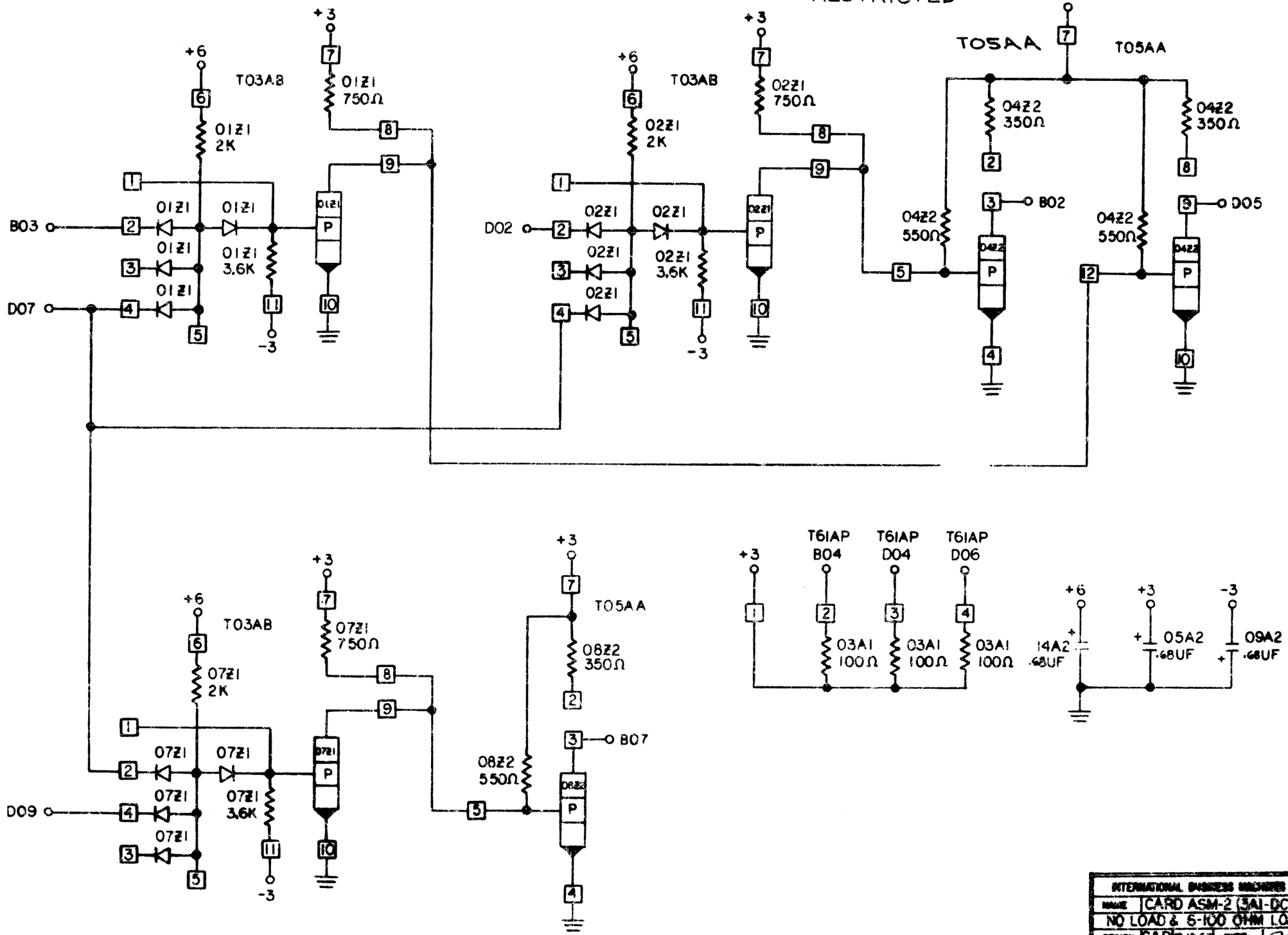

INTERNATIONAL BUSINESS MACHINES CORP					
NAME	CARD ASM-2 (3A1-DC1'S) NO LOAD & 5-100 OHM LOADS				
DESIGN	C&D	10-18-63	TYPE	2050	
DETAIL	C&D	10-21-63	SCALE		
CHECK	C&D	10-21-63	GRID		
APPRO	RBS	12-2-63	CHECK		

5803300 C