FORM 2-7C45-6 (1-63)

STANDARDS CODE	CURRENT AND PROMISING STANDARD		SYM	DATE	CHANGE NO.		SYM	DATE	CHANGE NO.		DEVELOPMENT NO.	Q/B
2-7045				11-29-64	2061853							
CARD CODE	APPROVAL	DATE		08-20-65	1613 10						5803309	
3309												

RESTRICTED

SHEET 4 OF 5

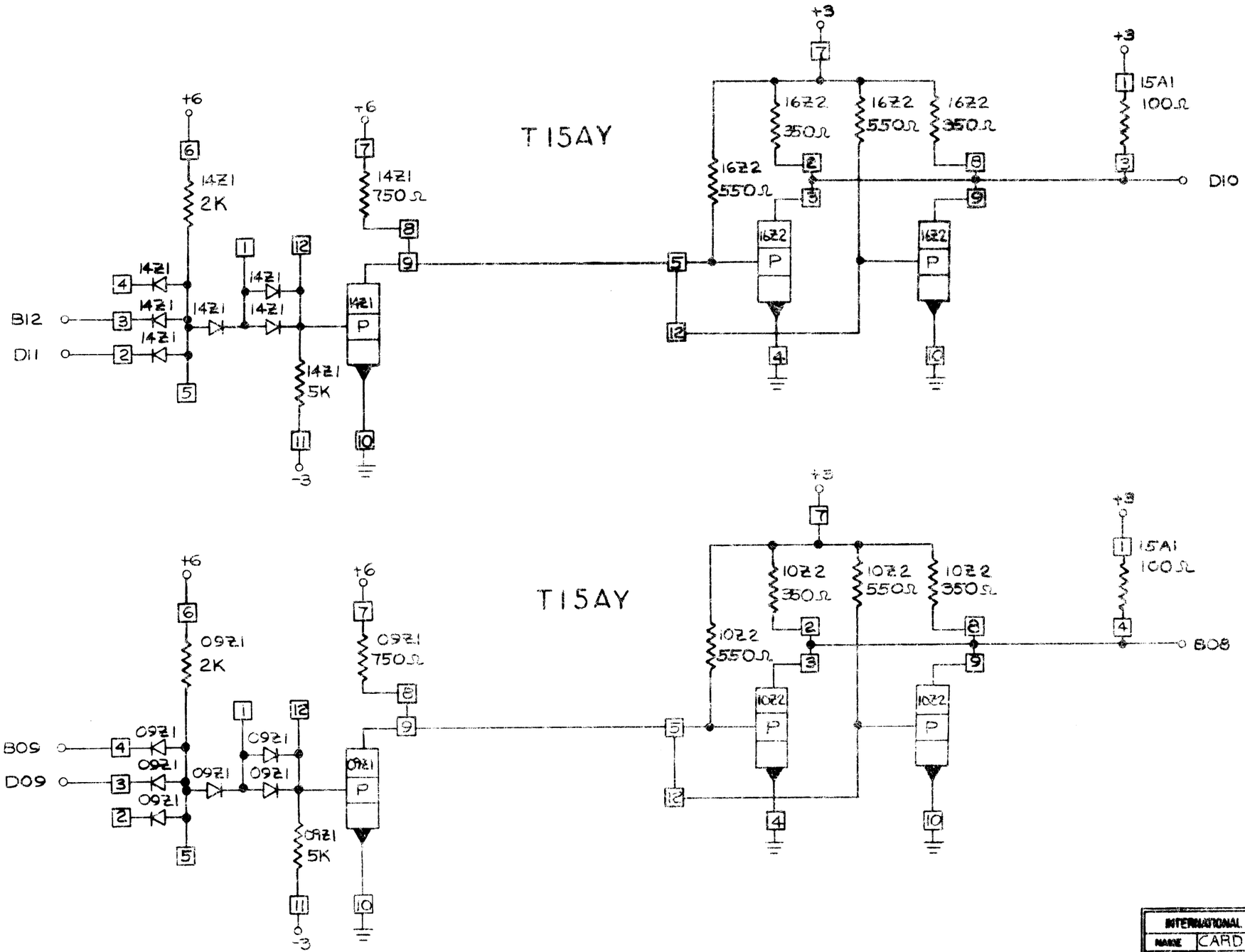

INTERNATIONAL BUSINESS MACHINES CORP					
NAME	CARD ASM-6 GATED HIGH POWER DRIVERS				
DESIGN	JDI	10-22-63	TYPE	2060	
DETAIL	JDI	10-22-63	SCALE	NONE	
CHECK	JDH	10-24-63	DRAW		
APPRO	RBS	12-7-63	CHECK	WWC	10-23-63

C 5803309