FORM 2-7045-6 (11-63)

STANDARDS CODE	CIRCUIT AND PACKAGING STANDARD		SYM	DATE	CHANGE NO	TECH APPRO	SYM	DATE	CHANGE NO	TECH APPRO	DEVELOPMENT NO	Q/M
2-6235				1-6-64	2369							
CARD CODE	APPROVAL	DATE		5-12-64							5803322	
3322	PEM			27SEP61	171761	B						

SHEET 4 OF 4

RESTRICTED

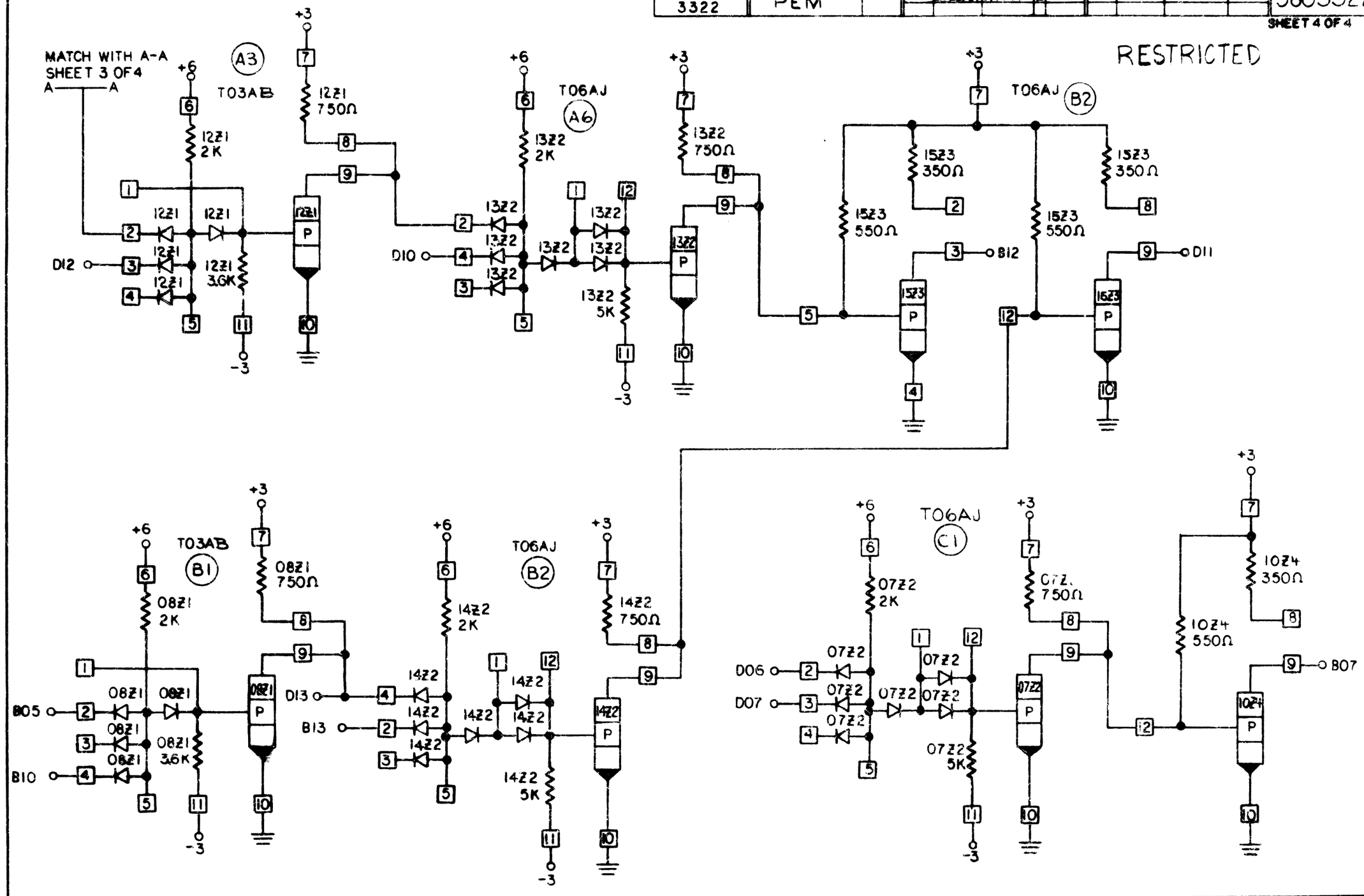

NOTE: NO BUSSING CONDITION

INTERNATIONAL BUSINESS MACHINES CORP			
NAME	CARD ASM-3 AOI DCI LINE DRIVERS WITH 4 AI INPUTS		
DESIGN	C&D 11-7-63	TYPE	2650
DETAIL	C&D 11-11-63	SCALE	NONE
CHECK	C&D 11-11-63	DRAW	NM 3-13-64
APPRO	RBS 12-3-64	CHECK	

5803322 C