STANDARDS CODE 2-7045

FIELD USE

CARD CODE

RESTRICTED

SHEET 3 of 3

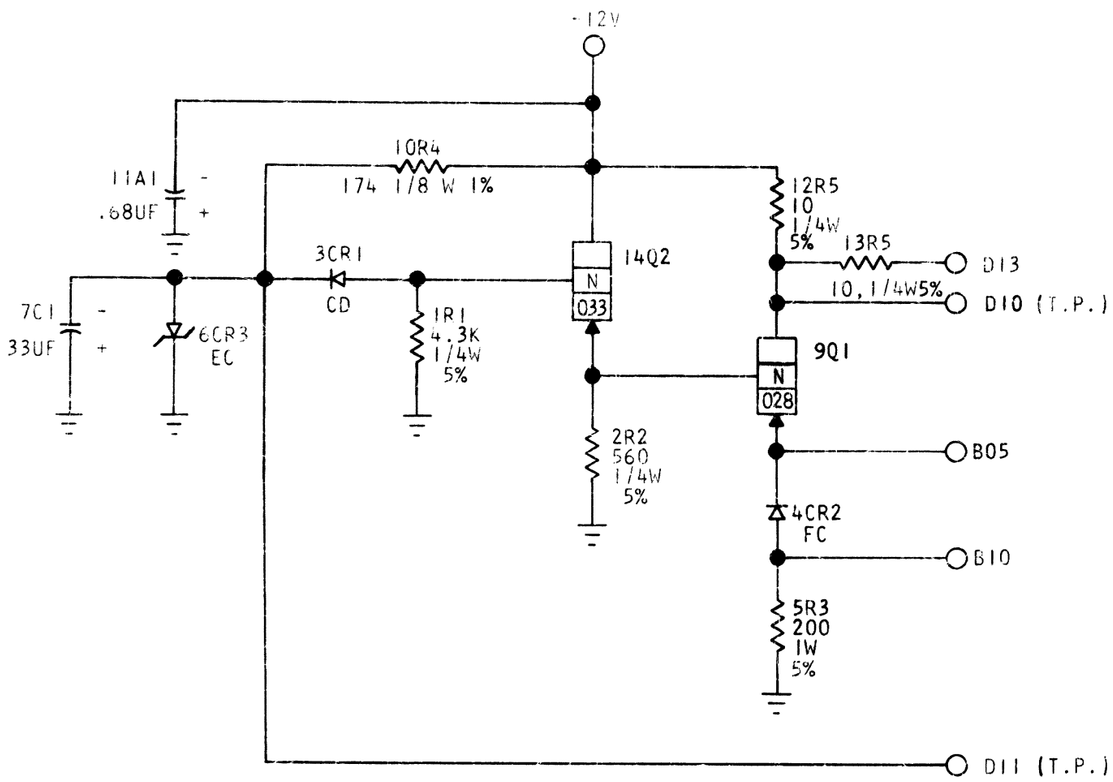


| CIRCUIT AND PACKAGING STANDARD | |
|---|---|
| APPROVAL | DATE |
| | |

| INTERNATIONAL BUSINESS MACHINES CORP. | | | | | | DATE | CHANGE NO. | APPROVAL | DATE | CHANGE NO. | APPROVAL | DEVELOPMENT NO. |
|---|---|---|---|---|---|---|---|---|---|---|---|---|
| NAME | FINAL AMPLIFIER -9V ZENER SUPPLY | | | | | 2-1-65 | 162230 A | | | | | |
| | | | | | | 27JAN69 | 173910 | | | | | |
| DESIGN | WBO | 11-1-64 | MODEL | 1802 | | | | | | | | |
| DETAIL | RLW | 11-6-64 | SCALE | NONE | | | | | | | | |
| CHECK | TAC | 11-6-64 | DRAW | RGR | 1-5-65 | | | | | | | |
| APPRO | RJB | 2-22-65 | CHECK | RGW | 2-22-65 | | | | | | | |

5803324

C