FORM 2-7045-6 (1-63)

STANDARD CODE	CIRCUIT AND PACKAGING STANDARD		SYM	DATE	CHANGE NO.	TECH APPRO	SYM	DATE	CHANGE NO.	TECH APPRO	DEVELOPMENT NO.	Q/IE
2-7045	APPROVAL	DATE		3-13-64	DEV 1912							
CARD CODE				8-24-64	161347							
3330	GHM	8-24-64									5803330	

RESTRICTED

SHEET 3 OF 5

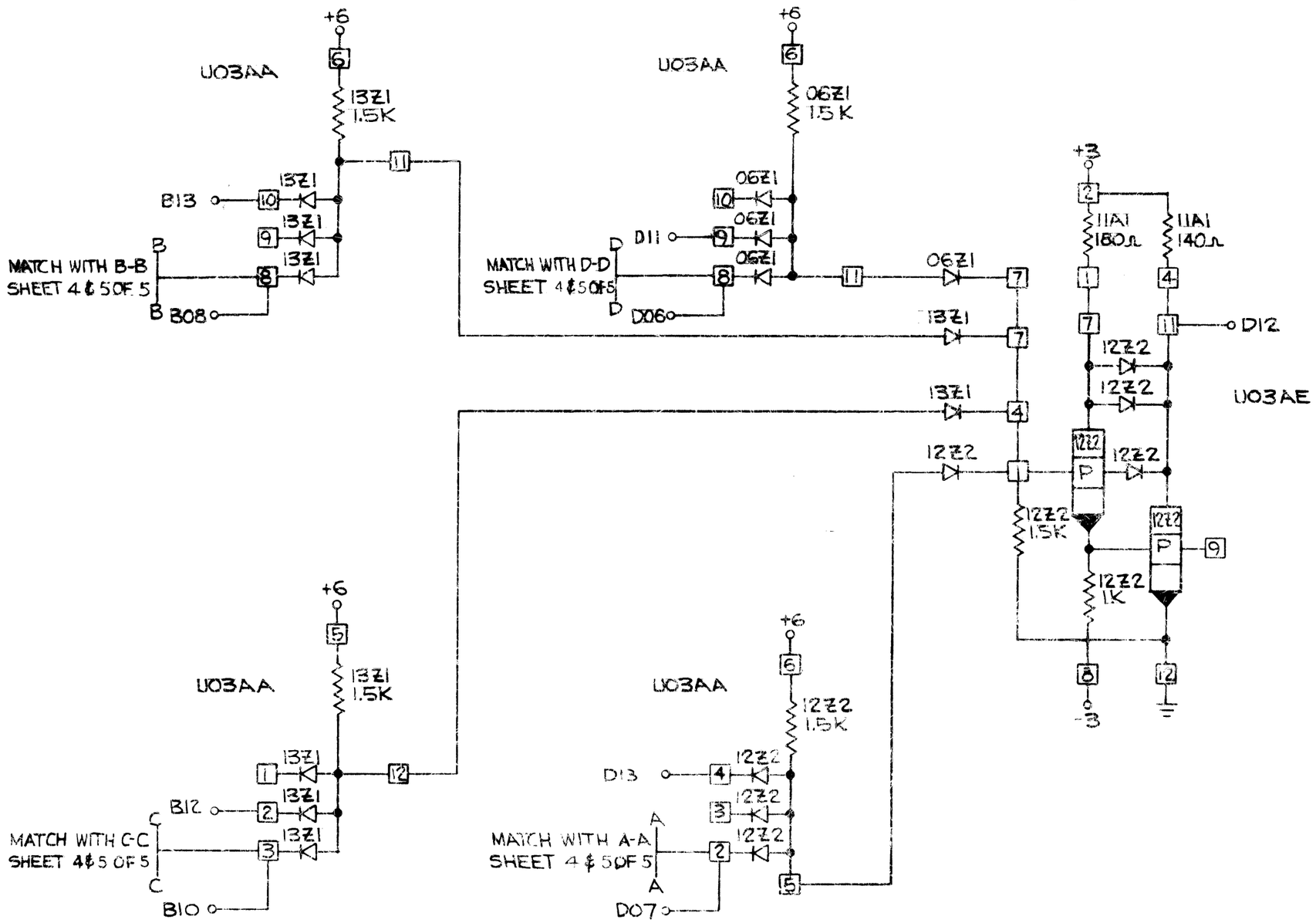

INTERNATIONAL BUSINESS MACHINES CORP				
NAME	3(2W-A,D)(4W-C,E)			
INVERT W/LOAD WITH FOUR COMMON NAME				
DESIGN	TDI	11-20-63	TYPE	2060
DETAIL	TDI	11-20-63	SCALE	NONE
CHECK	TDH	11-22-63	DRAW	
APPRO	GHM	3-9-64	CHECK	W.M. 11-23-63

C 5803330