FORM 2-7045-6 (1-63)

STANDARDS CODE	CIRCUIT AND PACKAGING STANDARD		SYM	DATE	CHANGE NO.		SYM	DATE	CHANGE NO.		DEVELOPMENT NO.	G/B
2-7045	APPROVAL	DATE		7-13-64	DEV 1912							
CARD CODE	GHM	8-24-64		8-24-64	161347						5803330	
3330												

RESTRICTED

SHEET 5 OF 5

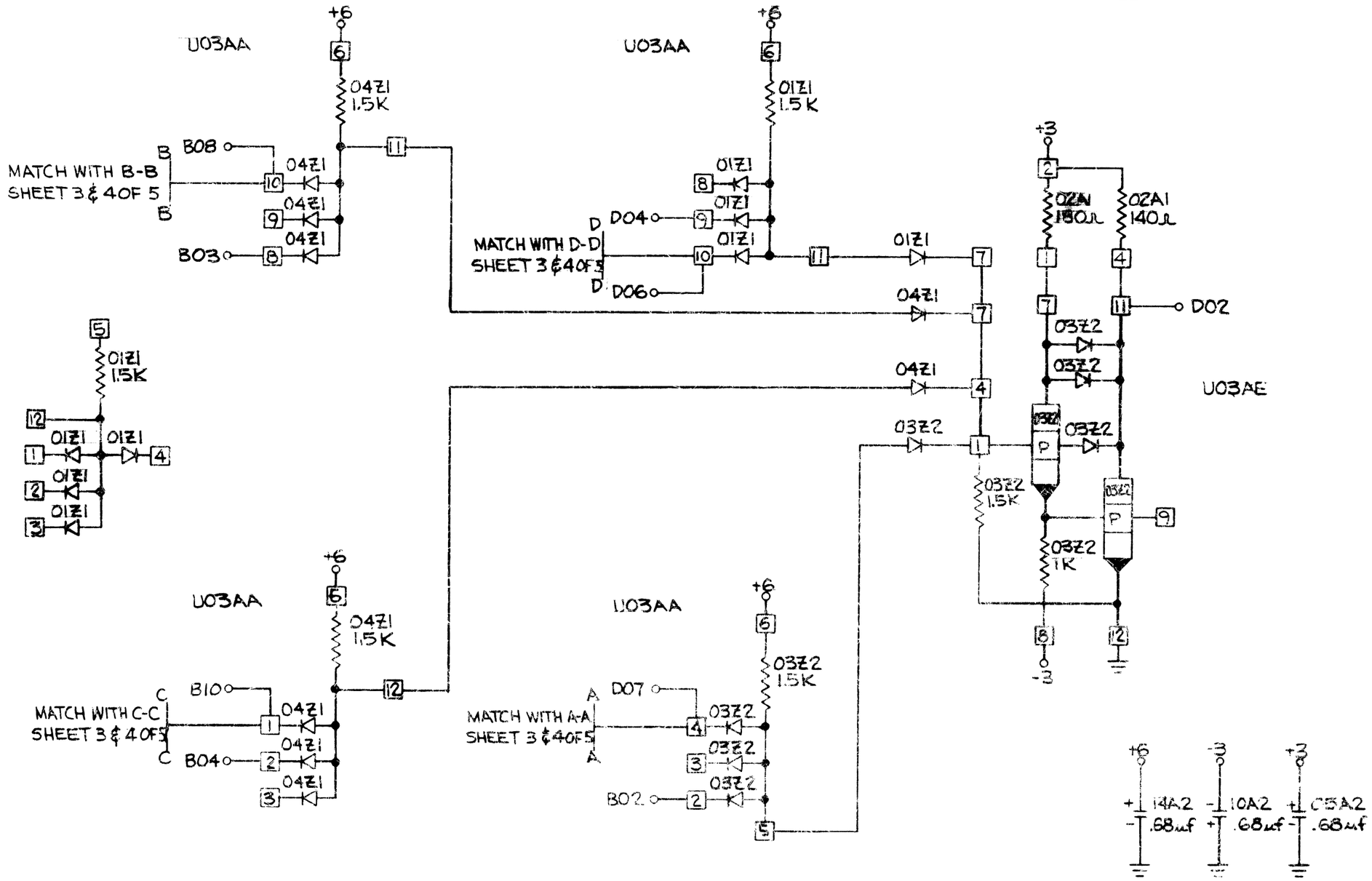

INTERNATIONAL BUSINESS MACHINES CORP					
NAME	3(2W-AND)(4W-OR) INVERT				
W/LOAD WITH FOUR COMMON INPUTS					
DESIGN	JDI	11-20-63	TYPE	2060	
DETAIL	JDI	11-20-63	SCALE	NONE	
CHECK	JDH	11-22-63	DRAW		
APPRO	GHM	3-9-64	CHECK	W.M.	11-23-63

C 5803330