RESTRICTED

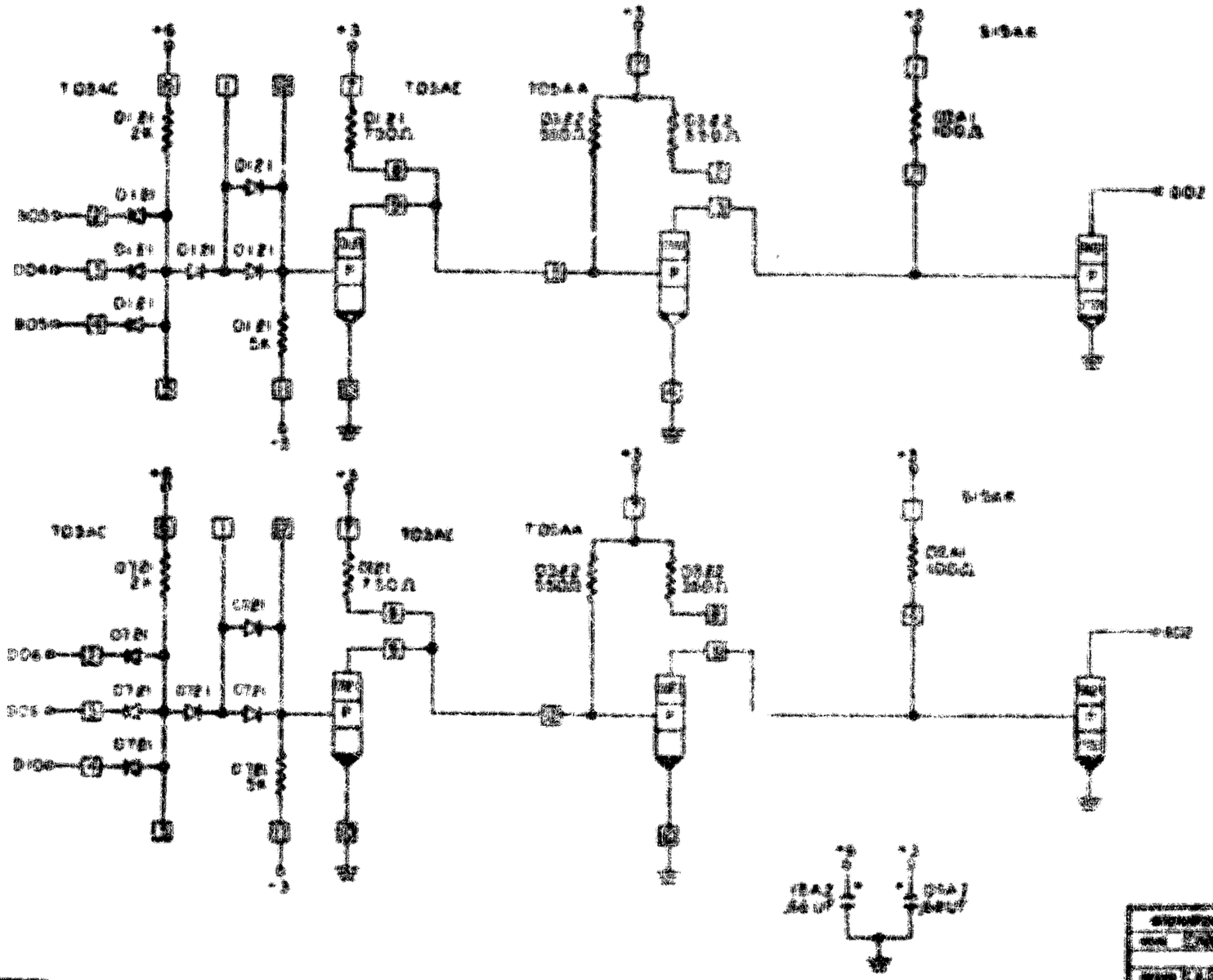

C