5803332

RESTRICTED

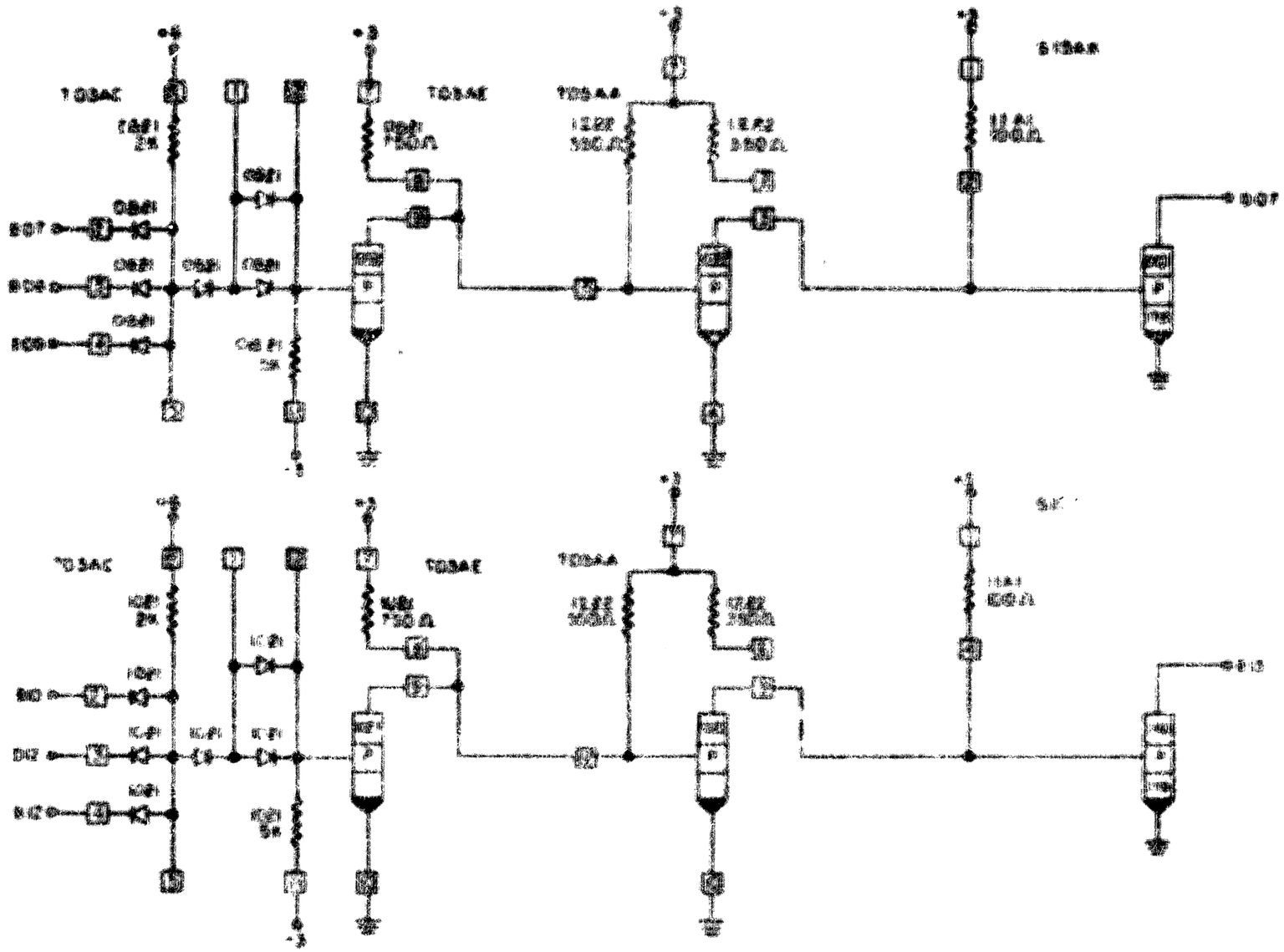

C