FORM 2-7046-6 (1-63)

STANDARD CODE	CIRCUIT AND PACKAGING STANDARD		SYM	DATE	CHANGE NO.		SYM	DATE	CHANGE NO.		DEVELOPMENT NO.	SYM
2-7045				1-31-64	DEV. 6076							
CARD CODE	APPROVAL	DATE		8-28-64	761356							
3335											5803335	

RESTRICTED

SHEET 5 OF 5

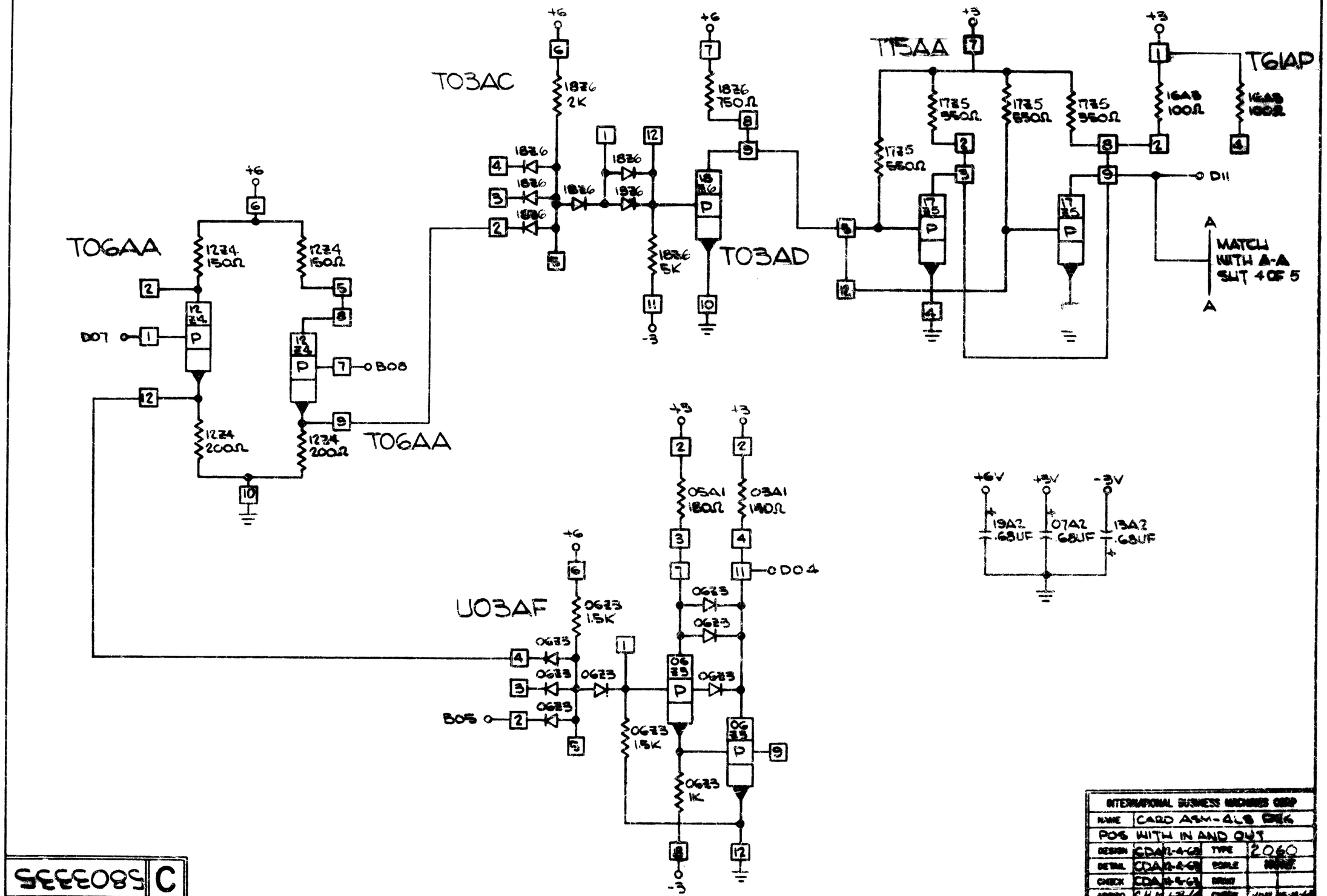

INTERNATIONAL BUSINESS MACHINES CORP			
NAME	CARD ASM-4LS DRK		
POS WITH IN AND OUT			
DESIGN	CDA 12-4-63	TYPE	2060
DETAIL	CDA 12-4-63	SCALE	NONE
CHECK	CDA 12-4-63	DRAWN	
APPRO	G.H.H. 1-28-64	CHECK	

5803335 C