FORM 2-7048-6 (1-63)

STANDARDS CODE	CIRCUIT AND PACKAGING STANDARD		SYM	DATE	CHANGE NO.	TECH APPRO	SYM	DATE	CHANGE NO.	TECH APPRO	DEVELOPMENT NO.	Q/M
2-7048				02-26-64	DEV 1966							
CARD CODE	APPROVAL	DATE		09-08-64	161462						5803352	
3352	GHM	8/21/64									SHEET 4 OF 4	

RESTRICTED

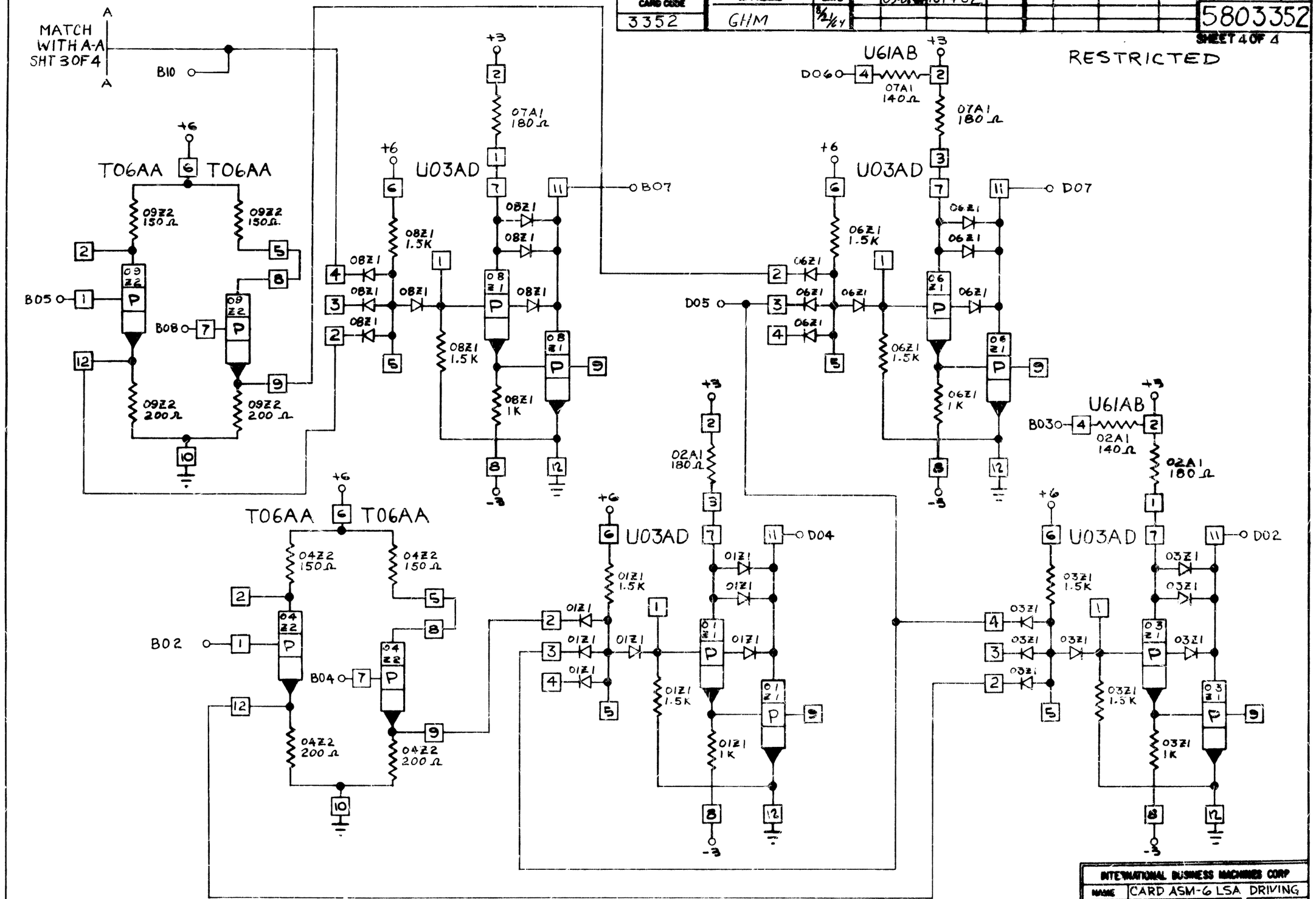

INTERNATIONAL BUSINESS MACHINES CORP				
NAME	CARD ASM-6 LSA DRIVING			
UNTERMINATED AND INV 2 COM IN				
DESIGN	CDA	12-26-63	TYPE	2060
METAL	CDA	12-26-63	SCALE	NONE
CHECK	CDA	1-2-64	DRAW	
APPRO	GHM	2-25-64	CHECK	RJA 1-7-64

C 5803352