FORM 2-7045-6 (1-63)

STANDARDS CODE	CIRCUIT AND PACKAGING STANDARD		SYM	DATE	CHANGE NO.	SYM	DATE	CHANGE NO.	DEVELOPMENT NO.	G/M
2-7045	APPROVAL	DATE		4-1-64	DEV 2512					
CARD CODE				9-8-64	61471				5803354	
3364									SHEET 3 OF 4	

RESTRICTED

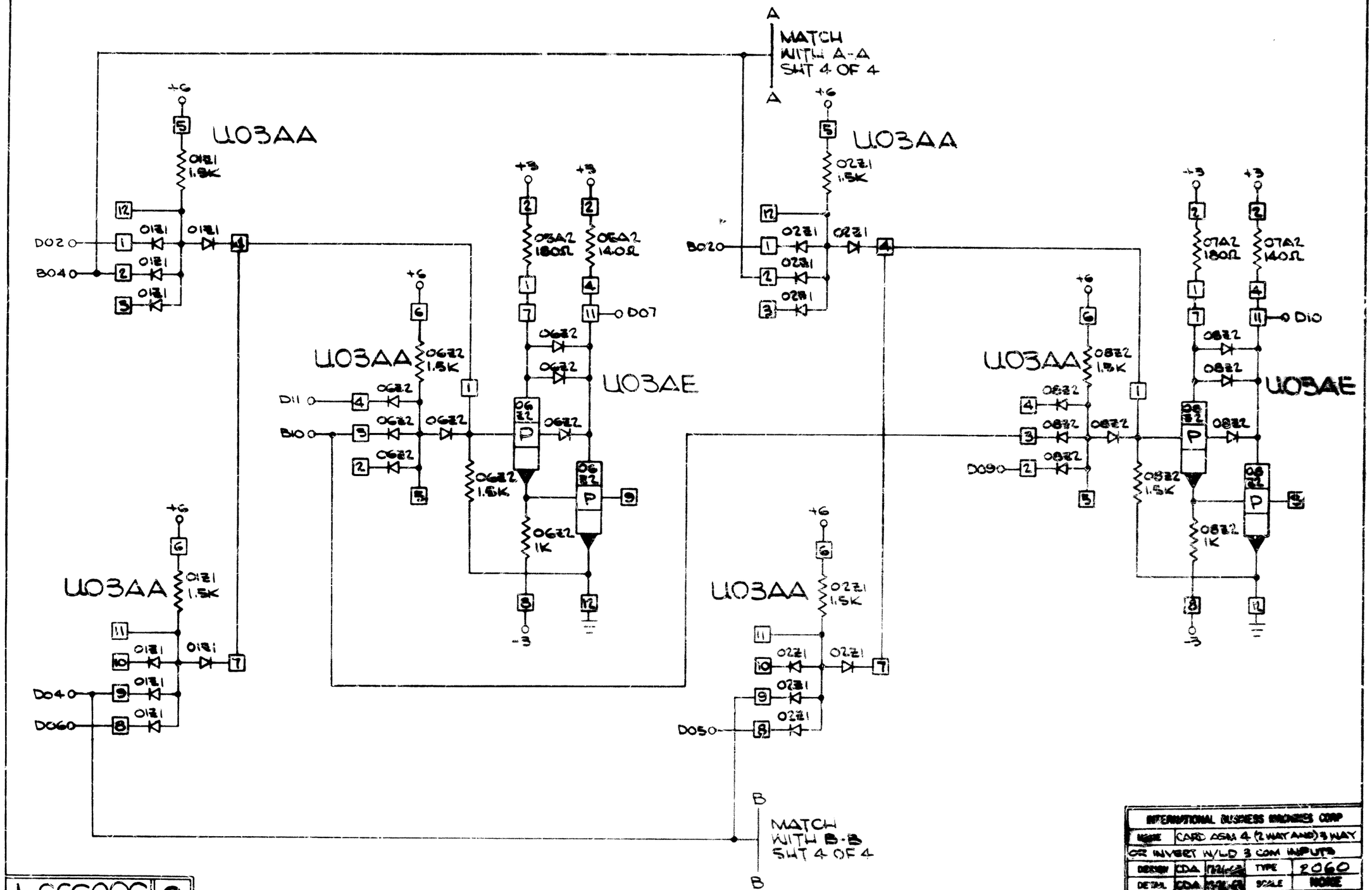

INTERNATIONAL BUSINESS MACHINES CORP				
NAME	CARD ASM 4 (2 WAY AND) 3 WAY OR INVERT W/LD 3 COM INPUTS			
DESIGN	CDA	7-21-64	TYPE	2060
DETAIL	CDA	7-21-64	SCALE	NONE
CHECK	[illegible]	9-2-64	DRAW	
APPRO	[illegible]	9-26-64	CHECK	W.M. 11-9-64

C 5803354