THIS ALD HAS BEEN HAND CHECKED AGAINST THE WIRING

SHEET 01 OF 5

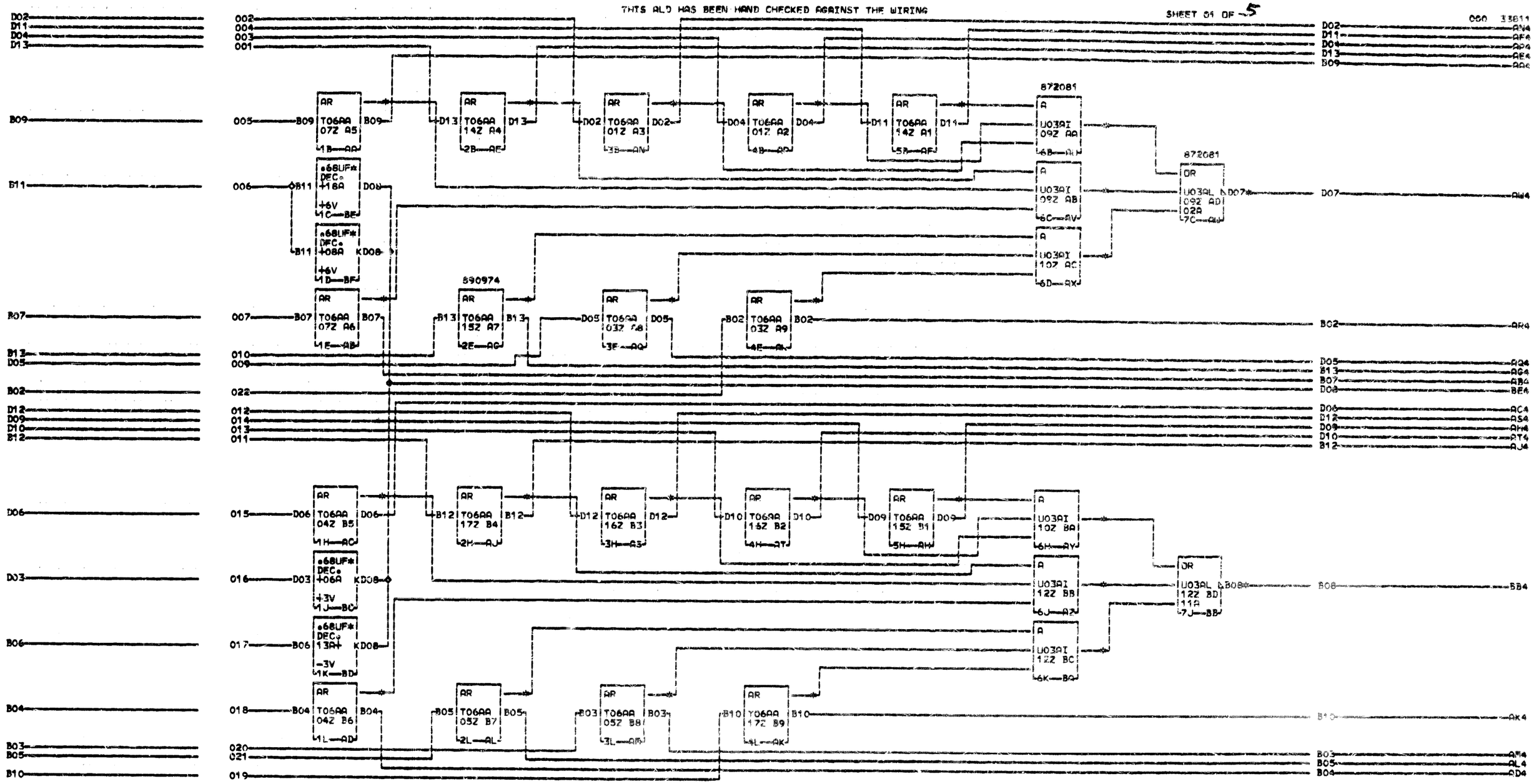

RESTRICTED

CARD SIZE◊ 1-12 PAC
VOLTAGE PINS
3 +6V◊B11 +3V◊D03
3 -3V◊B06 GND◊D08
8 STANDARD RESTRICTED
1
1

000

T06 I B09 07Z01 AE2
I B07 07Z07 1421
N 07Z05 07Z08 AF2
O 07Z09 09Z02 1421
O 07Z12 09Z03 I D13 14Z01 AJ2
AC2 I D11 14Z07 1721
0421 N 14Z05 14Z08 AK2
AD2 O 14Z09 09Z07 1721
0421 O 14Z12 09Z04 I B12 17Z07 AN2
I D06 04Z01 AG2 * I B10 17Z01 0121
I B04 04Z07 1521
0721 N 04Z05 04Z08 AH2
AB2 O 04Z09 10Z09 1521
0721 O 04Z12 12Z08 I B13 15Z01 AL2
I B13 15Z07 0521
N 15Z05 15Z08 AM2
O 15Z09 10Z10 0521
O 15Z12 10Z01 I B05 05Z01 AQ2
I B03 05Z07 0321
N 05Z05 05Z08 AR2
O 03Z09 12Z02 0321
O 05Z12 12Z03 I D05 03Z01 AU4
I B02 03Z07 0922
N 03Z05 03Z08 AV4 * AX4 * BA4 *
N 17Z05 17Z08 AP2
O 17Z09 12Z07 0121
O 17Z12 12Z04 I D02 01Z07 AS2
I D04 01Z01 1621
N 01Z05 01Z08 AT2
O 01Z09 09Z09 1621
O 01Z12 09Z08 I D12 16Z01 AN2
I D10 14Z07 0121
N 16Z05 16Z08 AP2
O 16Z09 10Z09 I 01Z12 09Z03
O 16Z12 10Z08 N 09Z12 02A03
N 09Z11 02A04 AZ4
O 09Z11 D07 1222
O 12Z11 D03
O 03Z09 10Z03 0922 1023 1222 Z1
O 03Z12 10Z02 AW4 AY4 BB4 V 06 +6V
0922 02A1 1023 1222 11A1 V 10 GND
I 16Z09 09Z07 I 15Z12 10Z01 I 17Z09 12Z07 Z2
I 01Z12 09Z08 I 03Z12 10Z02 I 04Z12 12Z08 V 13 -3V
I 01Z09 09Z09 I 03Z09 10Z03 I 04Z09 12Z09 V 15 +6V
I 14Z12 09Z04 I 16Z12 10Z08 I 05Z12 12Z03 V 16 GND
I 07Z09 09Z02 I 16Z09 10Z09 I 05Z09 12Z02 Z3
I 07Z12 09Z03 I 15Z09 10Z10 I 17Z12 12Z04 V 05 06 +6V
I 10Z04 09Z10 I 10Z04 09Z10 I 10Z07 12Z10 A1
N 10Z07 10Z10 N 12Z12 11A03 V 02 +3V
N 12Z11 11A04
O 12Z11 D03
VOLTAGES

3-30-64 DEV.3100
8-28-64 161329

2 3 WAY OR S LSA INPUTS			3
	3-3-3 EACH		3
DATE	08-14-64	MACH. ASSEMBLY	8
LOG	183A	FRAME	1
CD PG 1 OF 1	P.N.	5803381	1
IBM CORP.	PD	BLK.	BG 000