5803407 | STANDARDS CODE 2-7045

RESTRICTED

CARD CODE 3407 | 5803407

SHEET 3 OF 3

SHT. 3 OF 3

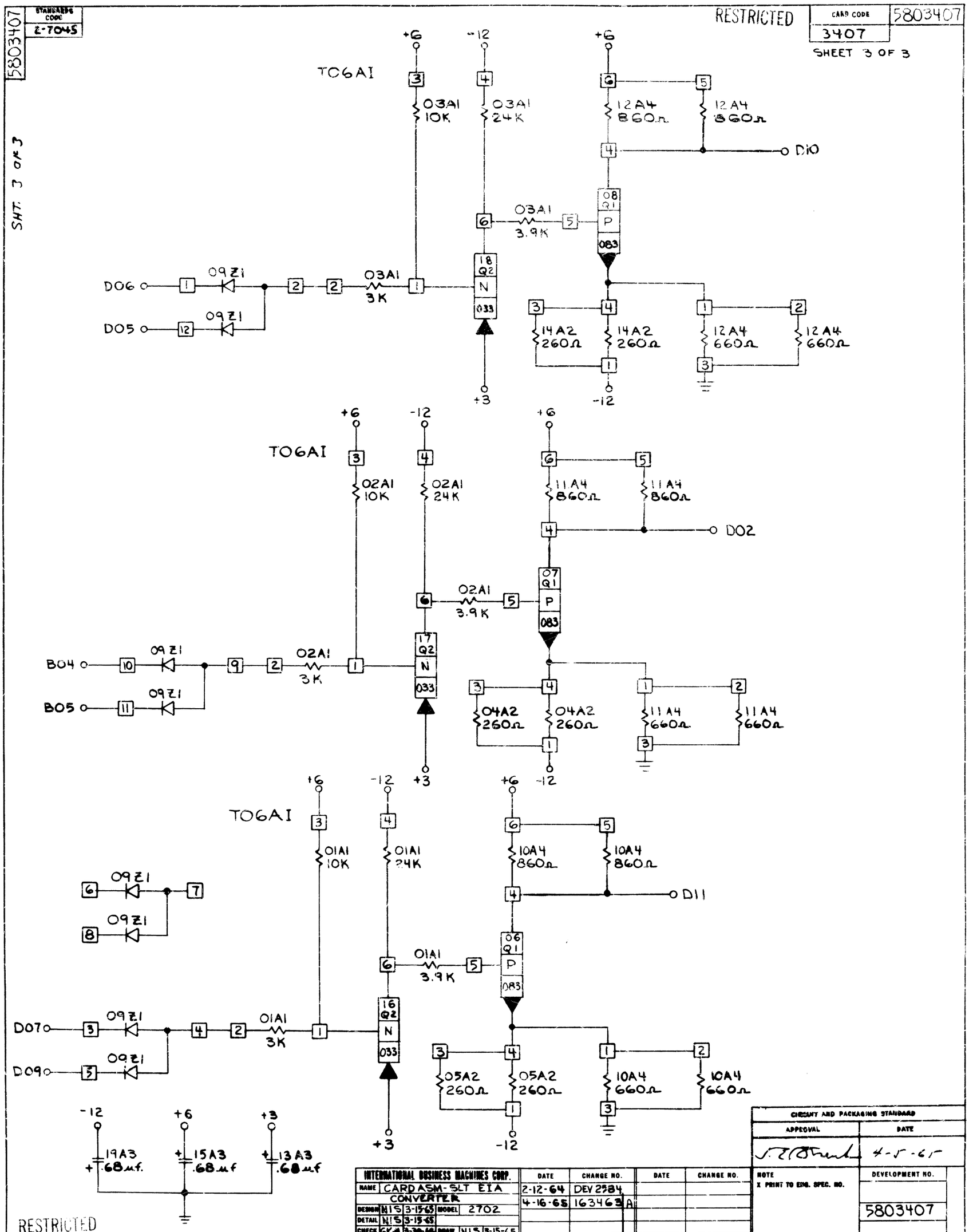

RESTRICTED

INTERNATIONAL BUSINESS MACHINES CORP.											
NAME	CARDASM-SLT EIA CONVERTER					DATE	CHANGE NO.	DATE	CHANGE NO.	NOTE X PRINT TO ENG. SPEC. NO.	DEVELOPMENT NO.
DESIGN	NIS	3-15-65	MODEL	2702		2-12-64	DEV 2584				
DETAIL	NIS	3-15-65				4-16-65	163463 A				5803407
CHECK	GCA	3-30-65	DRAW	NIS	3-15-65						
APPRO	[illegible]	4-5-65	CHECK								

CHECKING AND PACKAGING STANDARD	
APPROVAL	DATE
[illegible]	4-5-65

FORM 46-5279-1

G. B. CO., NO. 44-5117A 42840