5803419

SHEET 3 OF 3

CARD CODE 3419 5803419

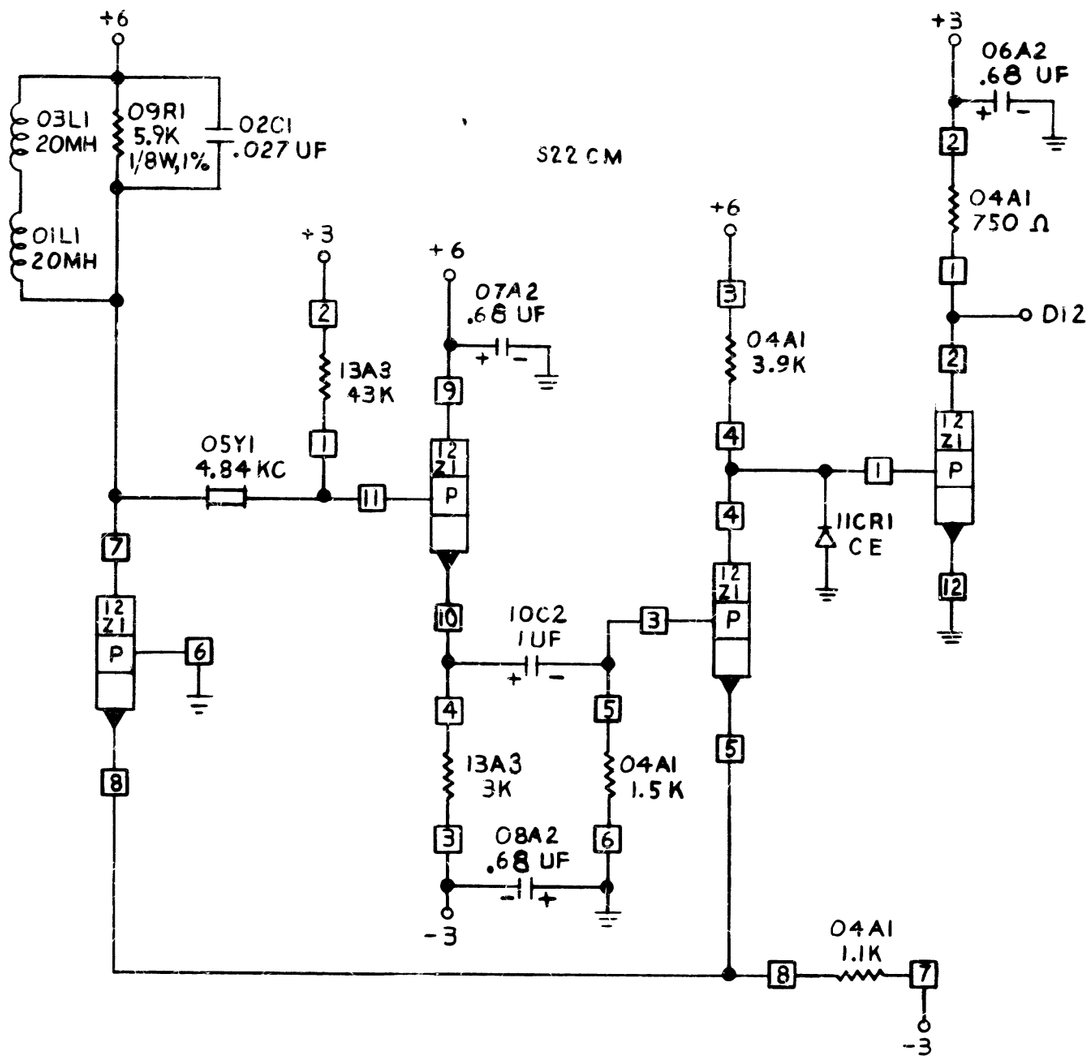

INTERNATIONAL BUSINESS MACHINES CORP.				DATE	CHANGE NO.	DATE	CHANGE NO.	NOTE	DEVELOPMENT NO.
NAME	CARD ASM-4.84 KC OSC			6-1-64	DEV. 2518			X PRINT TO ENG. SPEC. NO. 895291	
				3-25-65	16318A				5803419
DESIGN	WRW 5-5-64	MODEL	2702						
DETAIL	WRW 5-5-64								
CHECK	RMS 5-11-64	DRAW	G.T. 5-13-64						
APPRO	GPB 5-11-64	CHECK	5-14-64						

5803419

C. B. CO., NO. 4-511 42500

FORM 80-6076-1