5803420

SHT. 3 OF 3

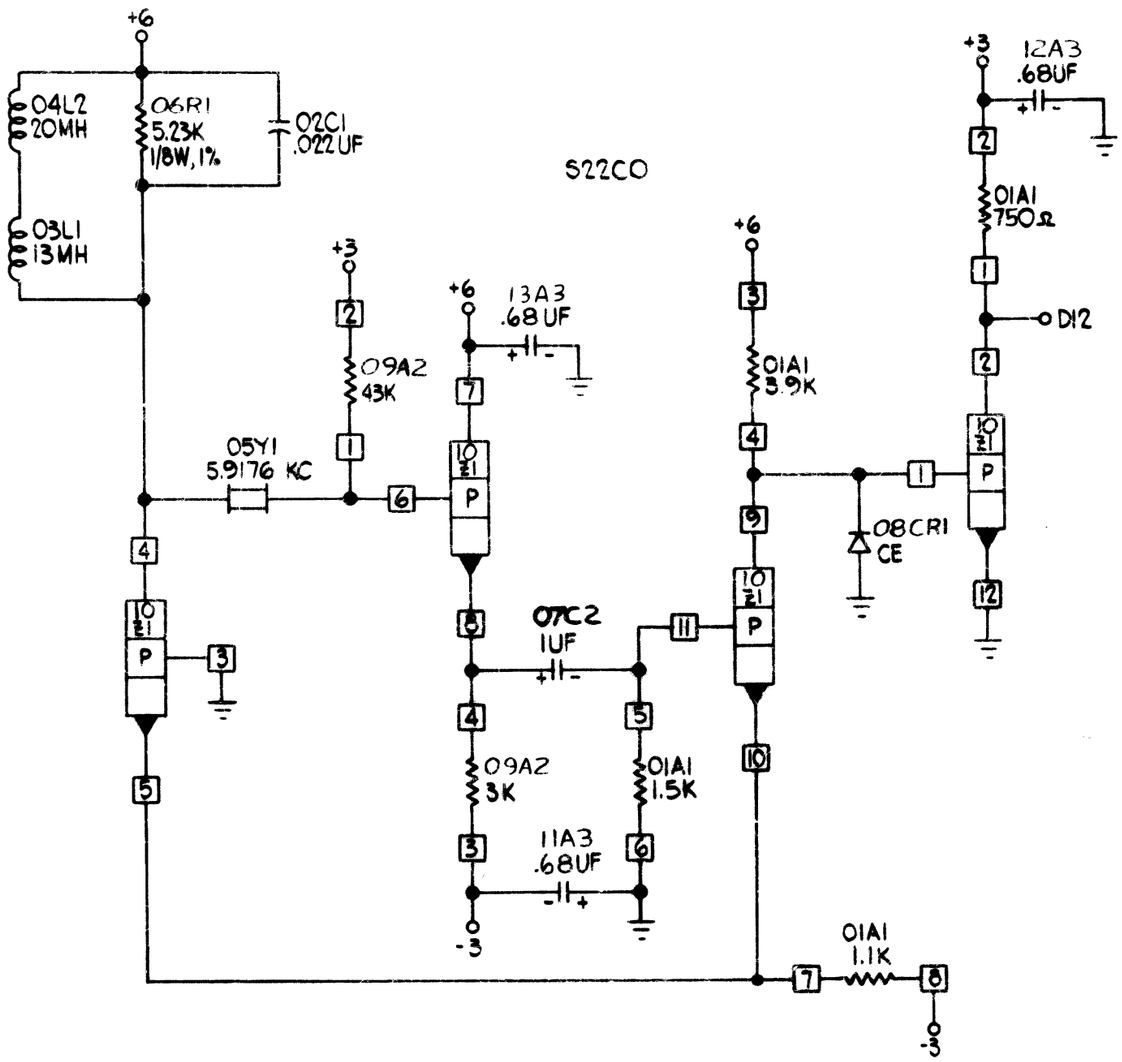


NO VOLTAGE PIN BUSSING

| INTERNATIONAL BUSINESS MACHINES CORP. | | | | | | | | | | | | | | | |
|---|---|---|---|---|---|---|---|---|---|---|---|---|---|---|---|
| NAME | CARD ASM - XCU 5.9176 KC OSCILLATOR | | | | | DATE | CHANGE NO. | | DATE | CHANGE NO. | NOTE X PRINT TO ENG. SPEC. NO. 895291 | DEVELOPMENT NO. | 5803420 |
| DESIGN | WSN | 4-5-64 | MODEL | XCU | | 5-4-64 | DEV-3362 | | | | | | |
| DETAIL | WSN | 4-5-64 | | | | 3-25-65 | 163147 | A | | | | 5803420 | |
| CHECK | DBE | 5-7-64 | DRAW | GT 5-13-64 | | 13 JAN66 | 166148 | B | | | | | |
| APPRO | RFB | 5-8-64 | CHECK | 5-14-64 | | 25OCT66 | 166314 | C | | | | | |

C.B CO NO 44-511 42386