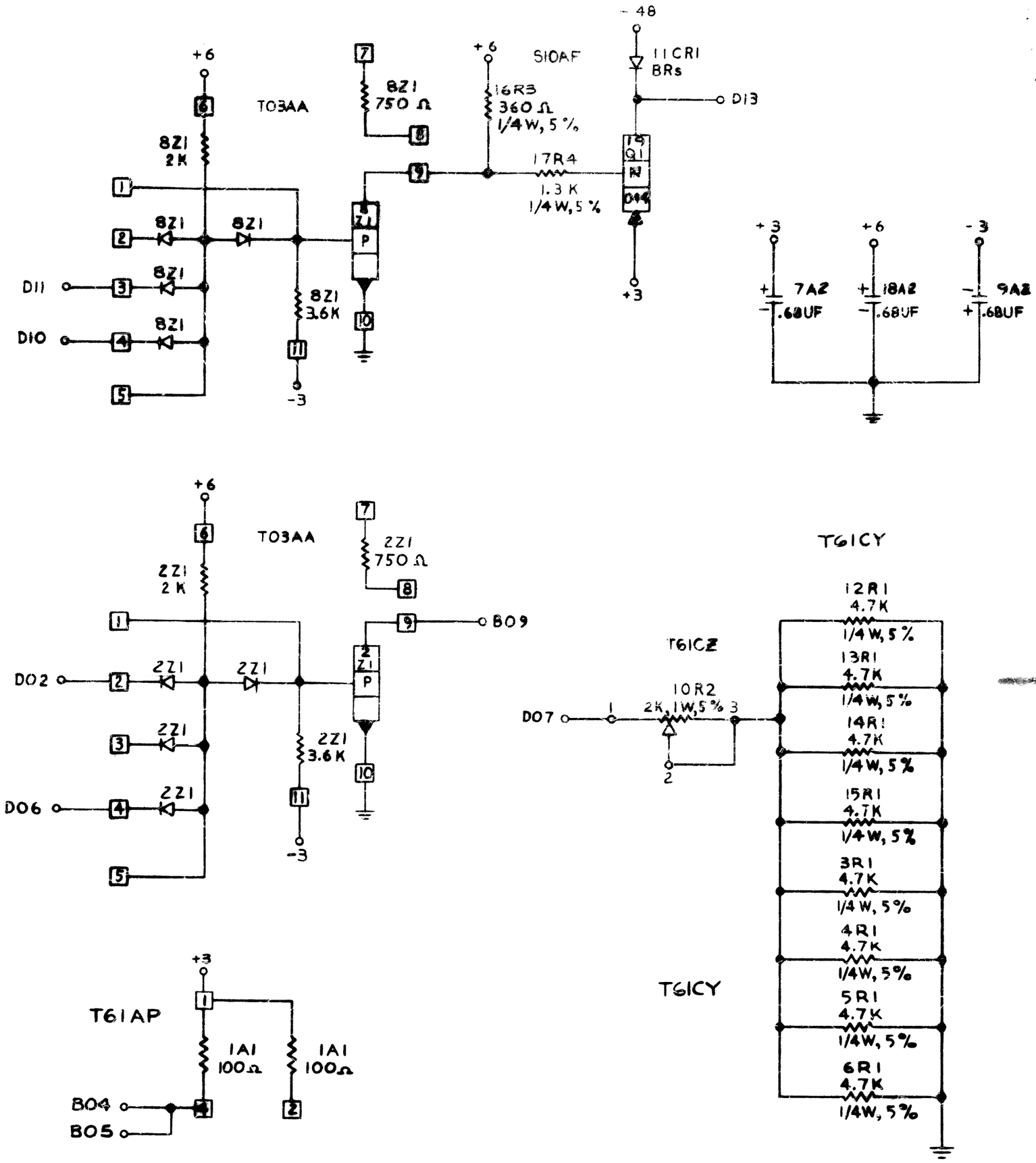

BUSSING NOTE:
GND - D08, D05 & D04 ARE TIED TOGETHER

INTERNATIONAL BUSINESS MACHINES CORP.	DATE	CHANGE NO.		DATE	CHANGE NO.
NAME [redacted] ASM-TTY DRIVER	5-8-64	DEV. 2908			
DESIGN [redacted] MODEL 2702	12-16-64	162210	A		
DETAIL [redacted]	2 MAY 66	167159	B		
CHECK [redacted] DRAW [redacted]	9 AUG 66	162185	C		

CIRCUIT & PAC STAN	
APP. JE Strunk	DATE 12-2-64
NOTE X PRINT TO ENG. SPEC. NO. 895291	DEVELOPMENT NO.
	5803423

5803423