5803424

STANDARDS CODE 2-7045

SHEET 3 OF 5

CARD CODE 3424 5803424

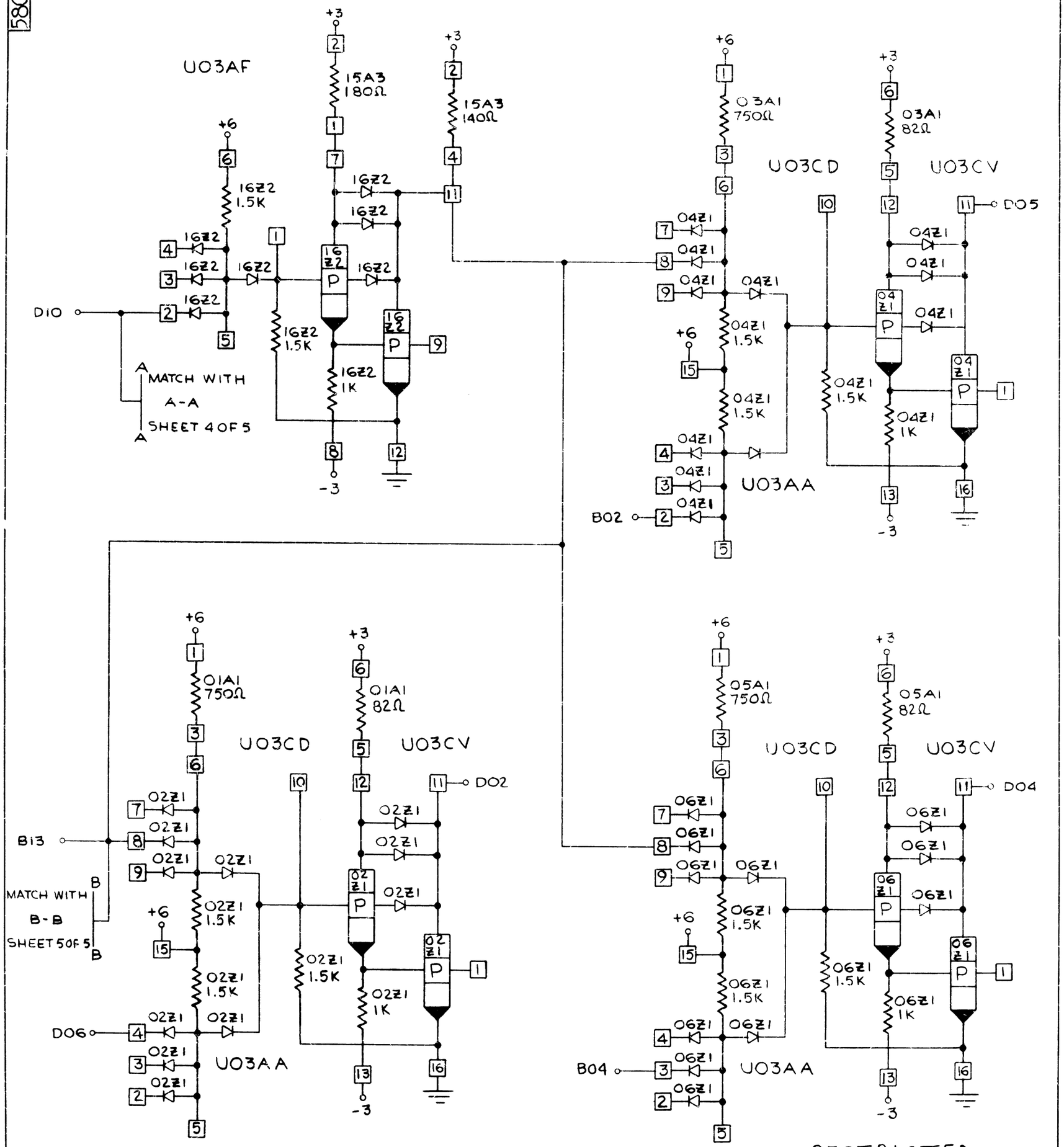

RESTRICTED

CIRCUIT & PACKAGING STANDARD	
APPROVAL	DATE

INTERNATIONAL BUSINESS MACHINES CORP.					DATE	CHANGE NO.	DATE	CHANGE NO.	NOTE	DEVELOPMENT NO.
NAME	CARD ASM- READ GATES				10-29-64	162025			X PRINT TO ENG. SPEC. NO.	
DESIGN	NIS	10-9-64	MODEL	2362						5803424
DETAIL	NIS	10-9-64								
CHECK	RSS	10-15-64	DRAW							
APPRO	RJ	10-16-64	CHECK							

5803424

C. B. CO., NO. 46-811A 48470

FORM 80-6279-1