5803426

STANDARD CODE 27045

SHEET 3 OF 5

CARD CODE 3426 5803426

RESTRICTED

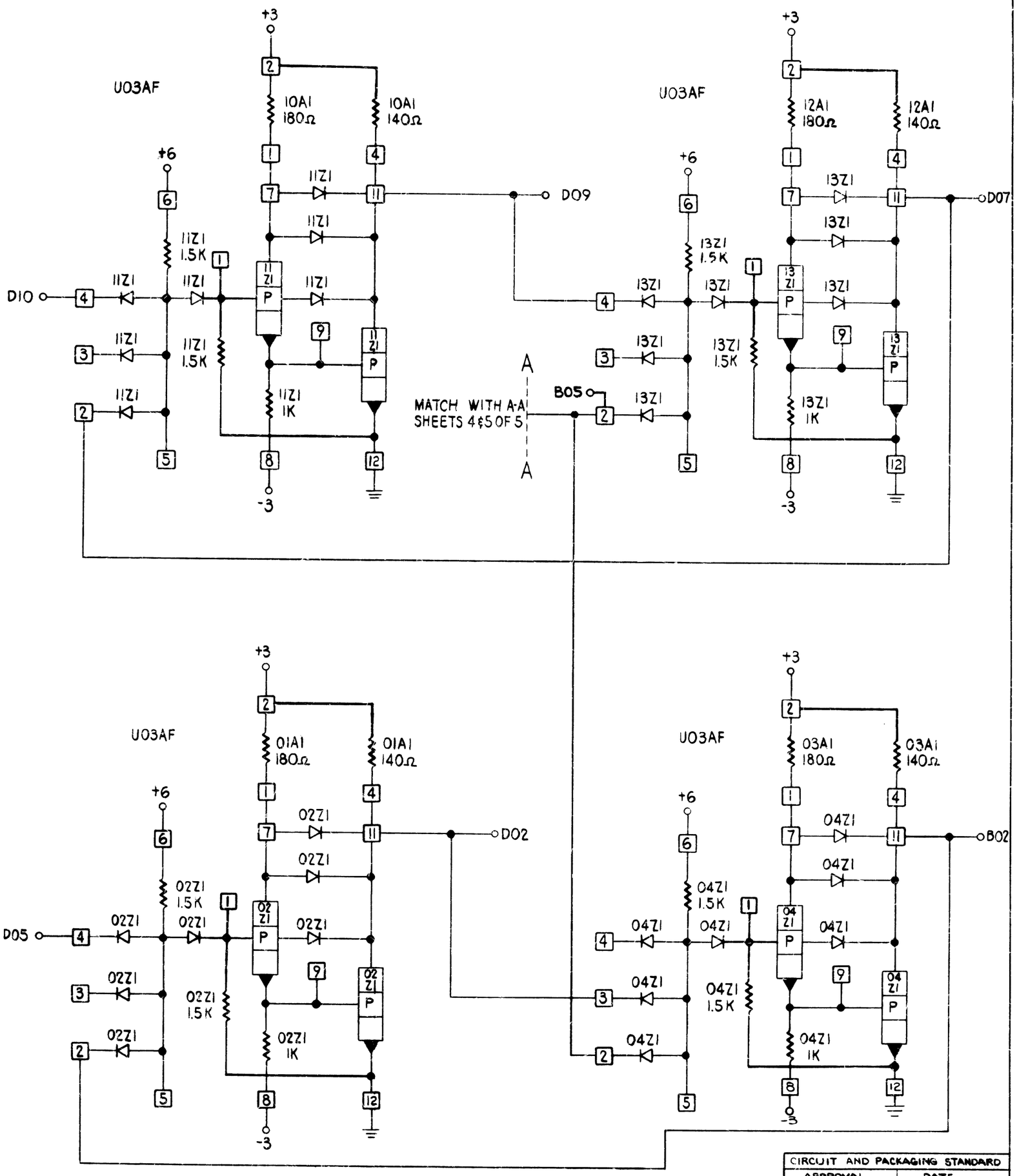

CIRCUIT AND PACKAGING STANDARD	
APPROVAL	DATE

INTERNATIONAL BUSINESS MACHINES CORP.	DATE	CHANGE NO.	DATE	CHANGE NO.	NOTE	DEVELOPMENT NO.
NAME CARD ASM - 5 BIT REGISTER	10-6-64	160897			X PRINT TO ENG. SPEC. NO. 895291	
DESIGN GAS 3-20-64 MODEL SP-4						5803426
DETAIL GAS 3-20-64						
CHECK GAS 3-20-64 DRAW GT 12-2-64						
APPRO 12-2-64 CHECK BK 12-2-64						

5803426

C. B. CO., NO. 44-511 42300

FORM 89-1279-1