5803427 STANDARDS CODE 2-7045

CARD CODE 5803427
3427

SHEET 3 OF 4

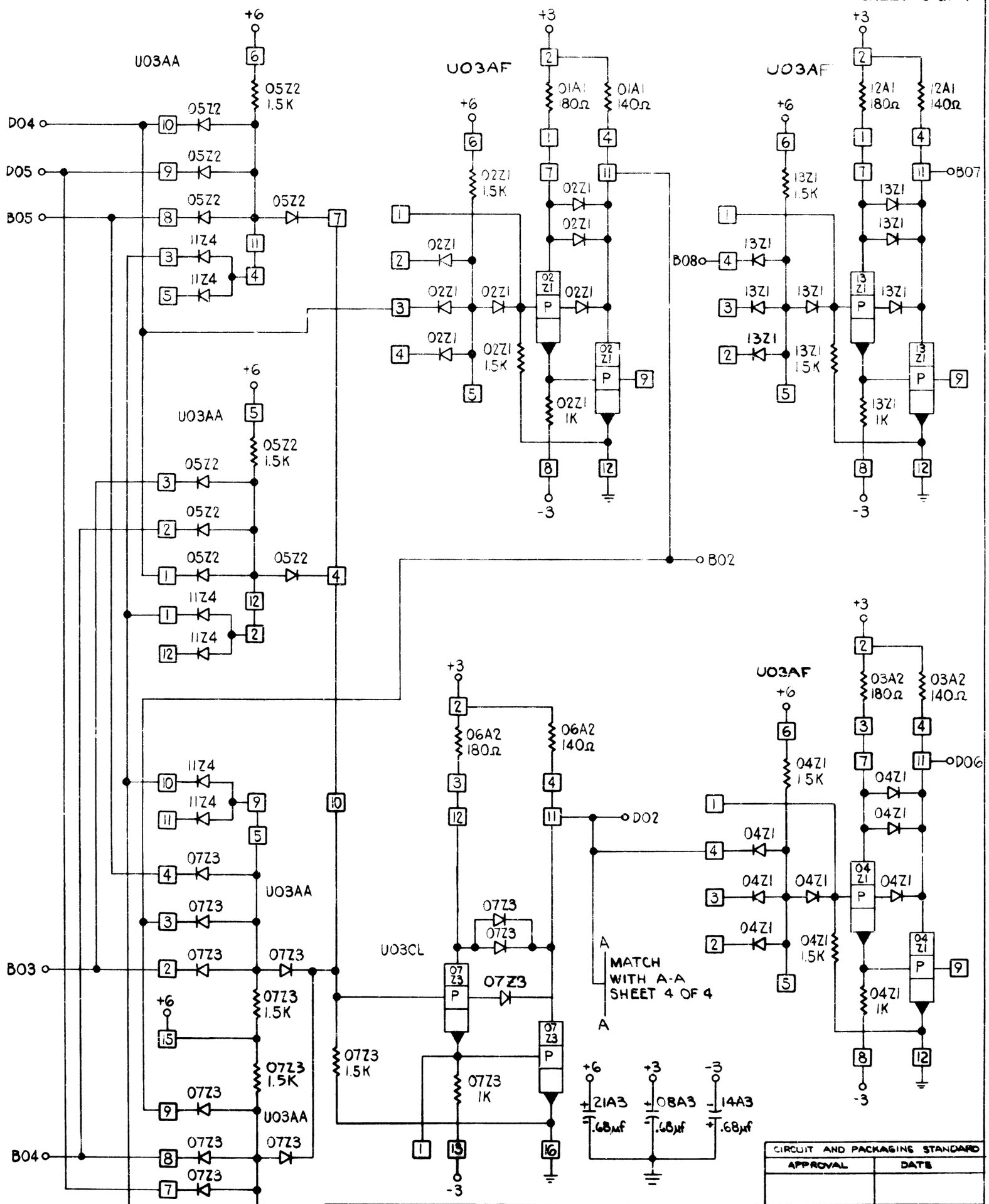

CIRCUIT AND PACKAGING STANDARD	
APPROVAL	DATE

INTERNATIONAL BUSINESS MACHINES CORP.											
NAME	CARD ASSEMBLY-2-3 WAY EXCLUSIVE OR				DATE	CHANGE NO.	DATE	CHANGE NO.	NOTE	DEVELOPMENT NO.	
DESIGN	WSN	3-16-64	MODEL	SP-4	10-8-64	161907			X PRINT TO ENG. SPEC. NO. 895291		5803427
DETAIL	WSN	3-16-64								5803427	
CHECK		4-13-64	DRAW	GT 3-19-64							
APPRO		4-14-64	CHECK								

C. B. CO., NO. 66-911

FORM 99-6279-1