STANDARD CODE 2-7045

CARD CODE 3428 5803428

SHEET 3 OF 5

RESTRICTED

SHEET 3 OF 5

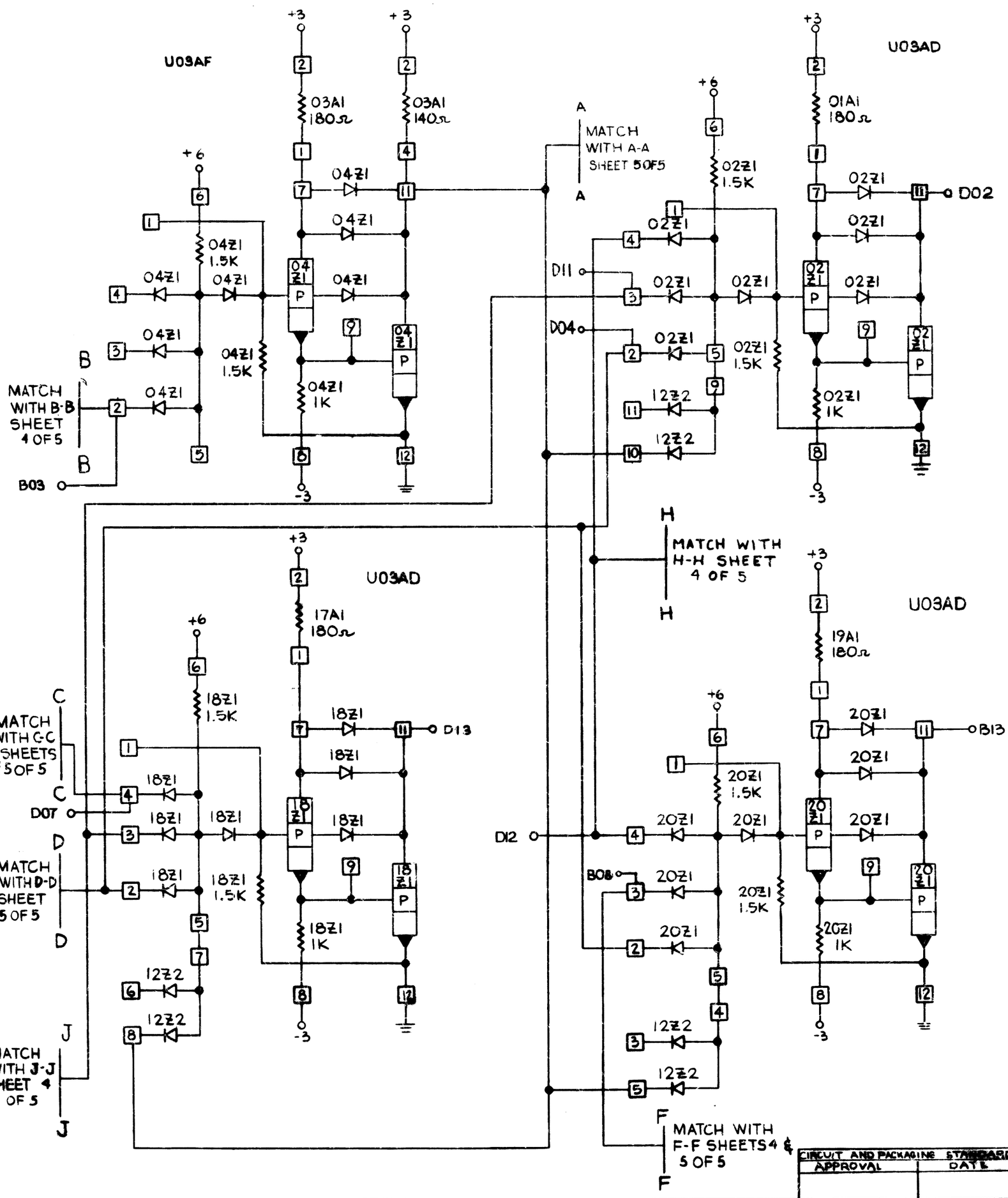

CIRCUIT AND PACKAGING STANDARD	
APPROVAL	DATE

INTERNATIONAL BUSINESS MACHINES CORP.		DATE	CHANGE NO.	DATE	CHANGE NO.	NOTE	DEVELOPMENT NO.
NAME	CARD ASM - GATE DECODER	10-26-64 / 3-12-65	161917 / 163452			X PRINT TO ENG. SPEC. NO. 895291	5803428
DESIGN / DETAIL / CHECK / APPRO	MODEL SP-4 / DRAW / CHECK						

5803428