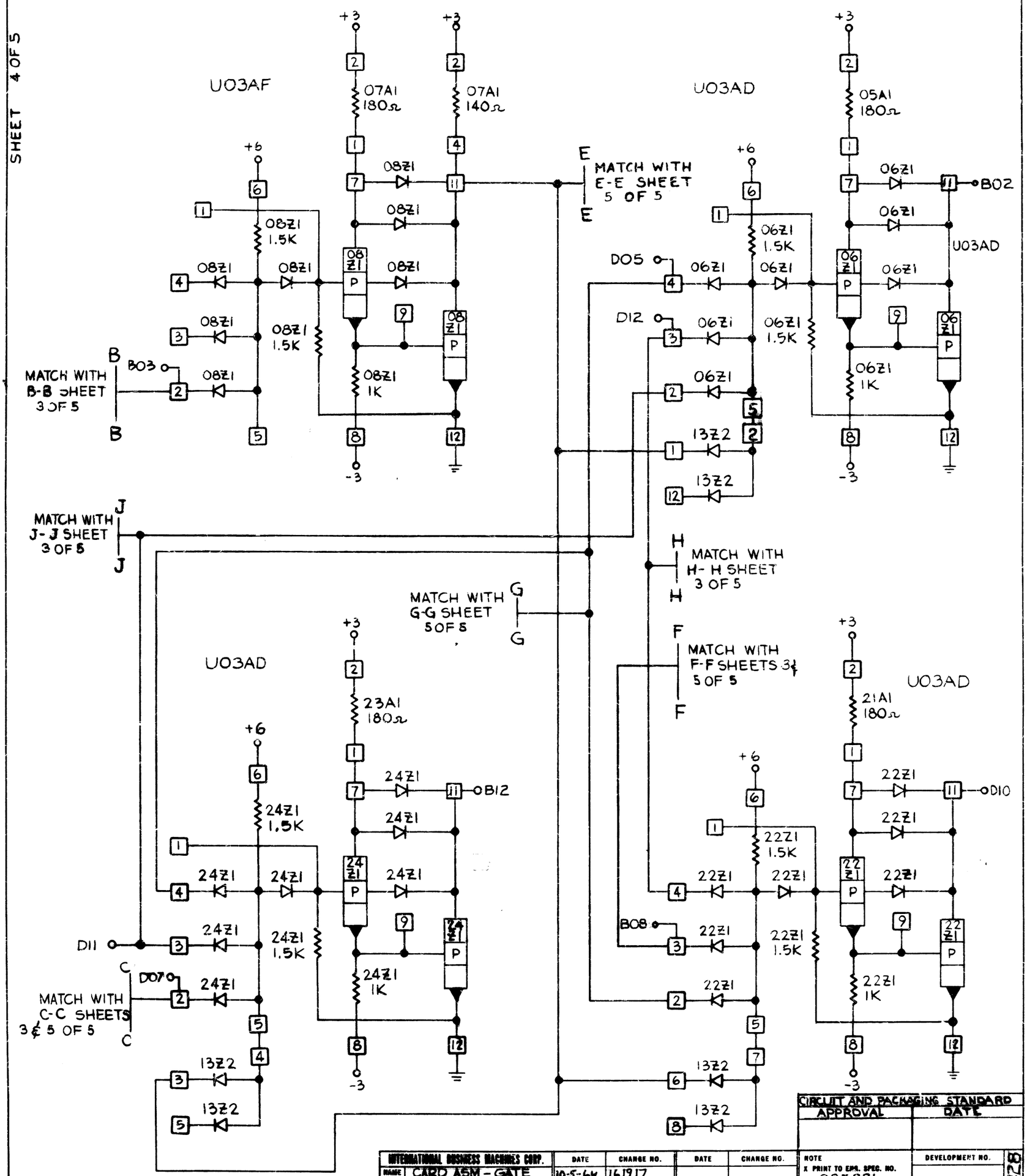

CIRCUIT AND PACKAGING STANDARD	
APPROVAL	DATE

INTERNATIONAL BUSINESS MACHINES CORP.

NAME	CARD ASM - GATE DECODER		
DESIGN	[redacted]	MODEL	SP-4
DETAIL	[redacted]		
CHECK	[redacted]	DRAW	N159-1764
APPRO	[redacted]	CHECK	

DATE	CHANGE NO.	DATE	CHANGE NO.
10-5-64	161917		
3-12-65	163452		

NOTE
X PRINT TO EPR. SPEC. NO. 895291

DEVELOPMENT NO.
5803428

5803428

C. B. CO., NO. 46-811 A2000