5803428 STANDARD CODE 2-7045

CARD CODE 3428 5803428

SHEET 5 OF 5

RESTRICTED

SHEET 5 OF 5

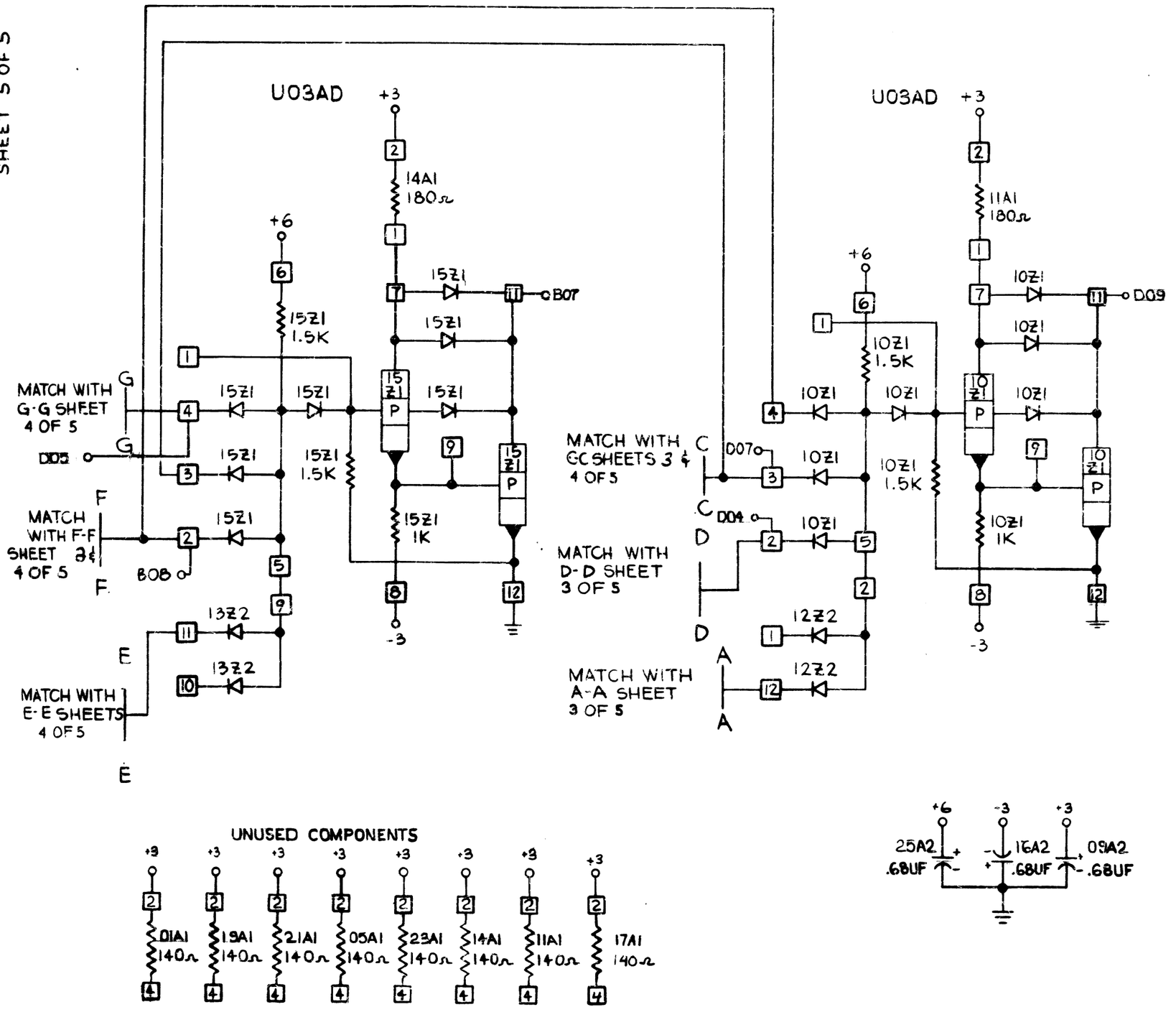

UNUSED COMPONENTS

CIRCUIT AND PACKAGING STANDARD	
APPROVAL	DATE

INTERNATIONAL BUSINESS MACHINES CORP.		DATE	CHANGE NO.	DATE	CHANGE NO.	NOTE	DEVELOPMENT NO.
NAME	CARD ASM - GATE	10-5-64	161917			X PRINT TO ENG. SPEC. NO. 895291	
DESIGN	MODEL SP-4	3-12-65	163452				5803428
DETAIL							
CHECK	DRAW						
APPRD	CHECK						

5803428

C. B. CO., NO. 44-511

FORM 80-5275-1