STANDARDS CODE	CIRCUIT AND PACKAGING STANDARD		SYM	DATE	CHANGE NO	TECH APPRO	SYM	DATE	CHANGE NO	TECH APPRO	DEVELOPMENT NO	Q/M
2-7045				3-20-64	DEV2901							
CARD CODE	APPROVAL	DATE		12-09-64	162186							
3429				28JUL65	164715	B					5803429	

SHEET 3 OF 4

RESTRICTED

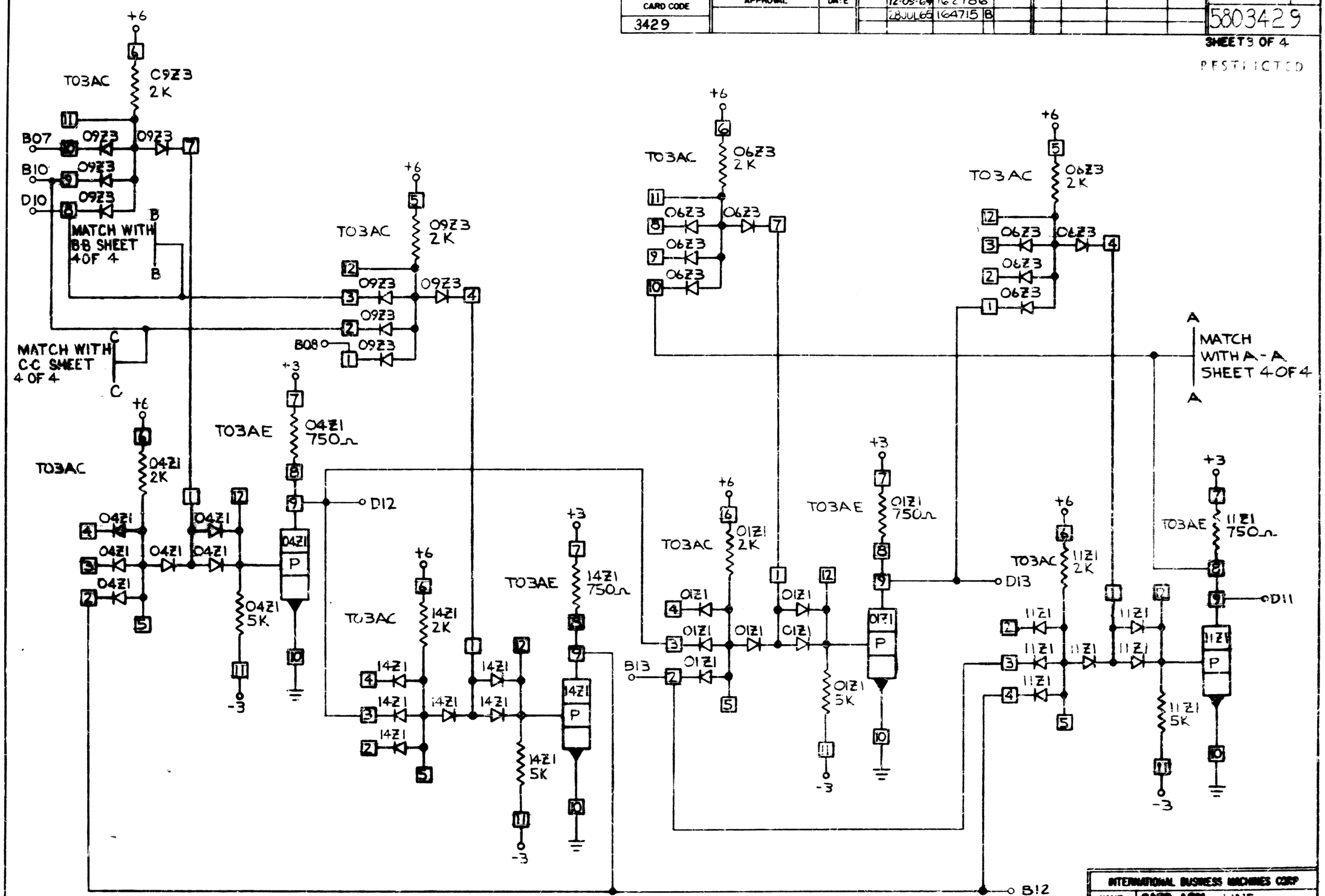

INTERNATIONAL BUSINESS MACHINES CORP				
NAME	CARD ASM – LINE ADAPTER			
DESIGN	TDI	3-20-64	TYPE	2702
DETAIL	TDI	3-20-64	SCALE	NONE
CHECK		4-6-64	DRAW	
APPRO		4-6-64	CHECK	

C 5803429