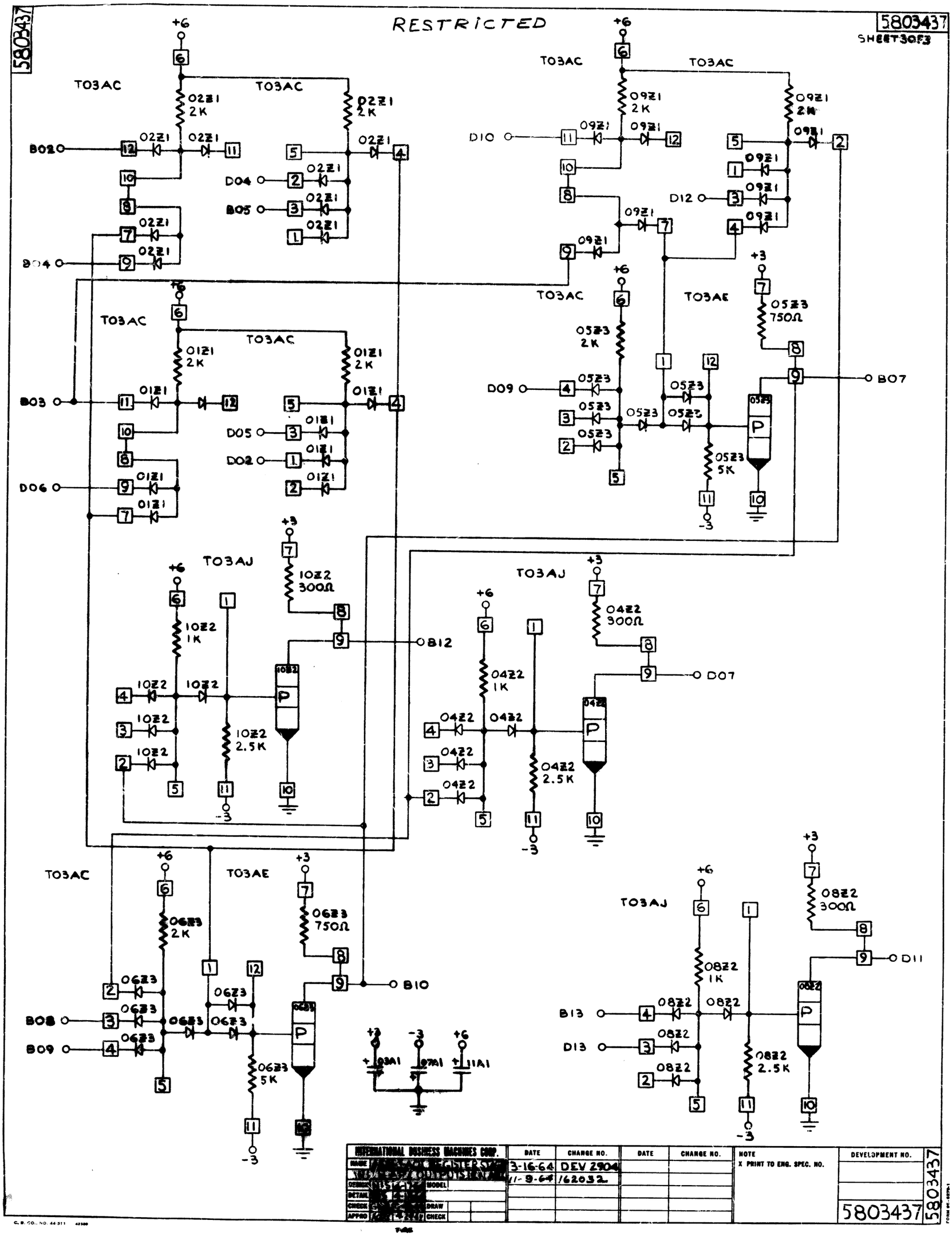
RESTRICTED
5803437
SHEET 3 OF 3
T03AC
T03AE
T03AJ
02Z1 2K
01Z1 2K
09Z1 2K
05Z3 2K
05Z3 750Ω
05Z3 5K
10Z2 300Ω
10Z2 1K
10Z2 2.5K
04Z2 300Ω
04Z2 1K
04Z2 2.5K
06Z3 2K
06Z3 750Ω
06Z3 5K
08Z2 300Ω
08Z2 1K
08Z2 2.5K
B02
B04
B05
D04
B03
D05
D02
D06
D10
D12
D09
B07
B12
D07
B08
B09
B10
B13
D13
D11
+6
+3
-3
P
INTERNATIONAL BUSINESS MACHINES CORP.
DATE
CHANGE NO.
3-16-64
DEV 2904
11-9-64
162032
NOTE
X PRINT TO ENG. SPEC. NO.
DEVELOPMENT NO.
5803437