STANDARDS CODE

5803452

CARD CODE 5803452

SHEET 3 OF 3

RESTRICTED

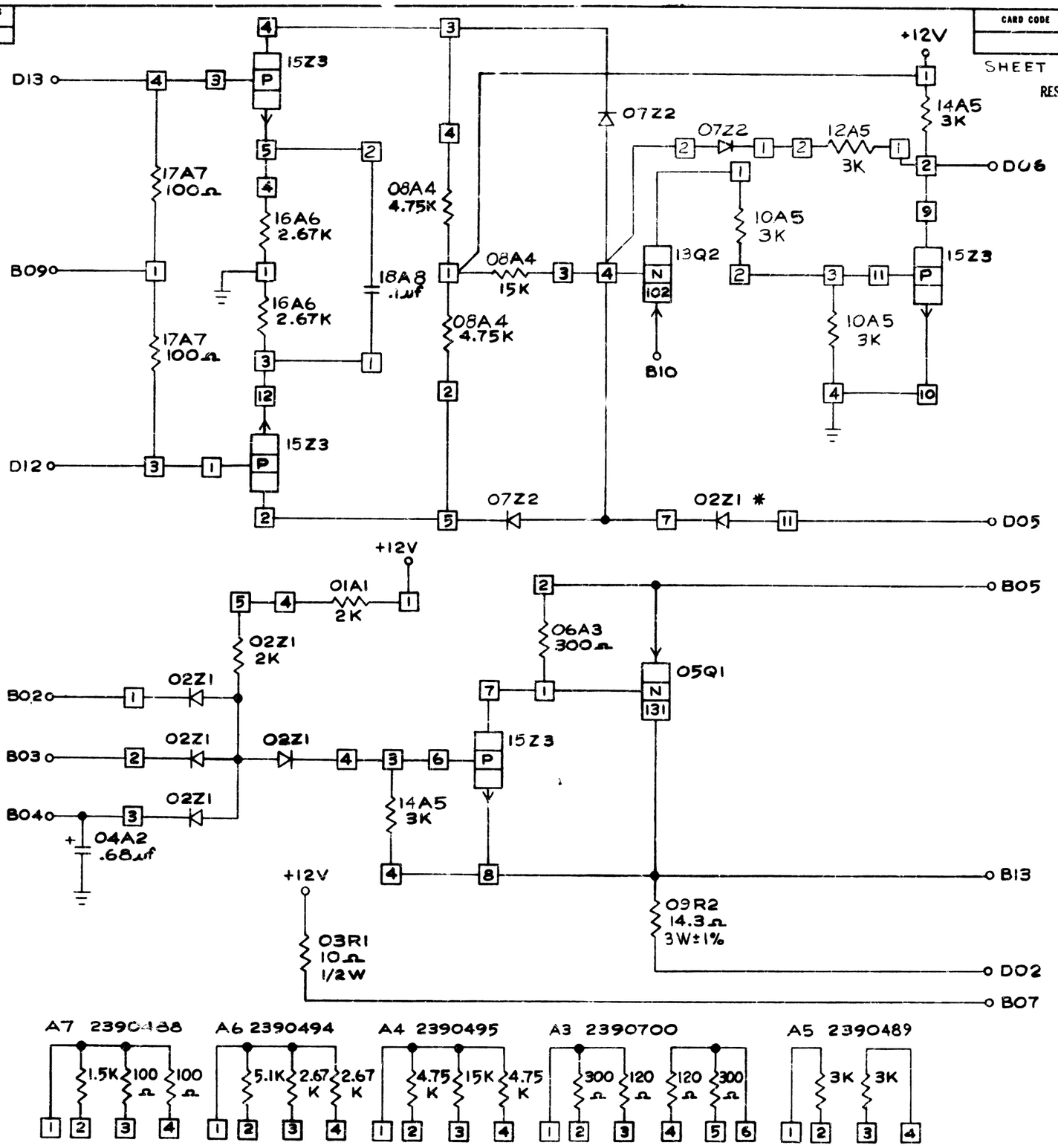

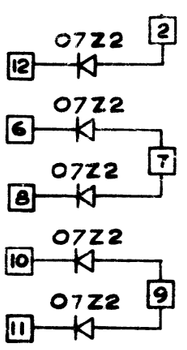

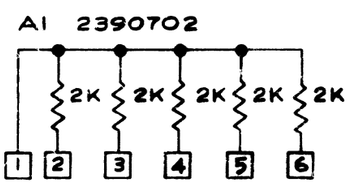

UNUSED COMPONENTS

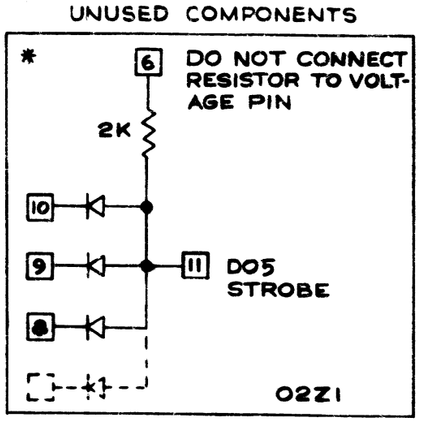

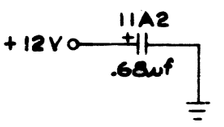

CIRCUIT AND PACKAGING STANDARD	
APPROVAL	DATE

INTERNATIONAL BUSINESS MACHINES CORP.					
NAME	SENSE AMP & INHIBIT DRIVER				
DESIGN	RT	4-8-4	MODEL		
DETAIL	MRL	4-17-4	SCALE		
CHECK	RT	4-23-4	DRAW	MRL	4-17-64
APPRO			CHECK	RD	1-28-4

DATE	CHANGE NO.	APPROVAL	DATE	CHANGE NO.	APPROVAL	DEVELOPMENT NO.
2-21-64	DEV 2101					
5-20-64	160704					
6-30-64	160535					
11-11-64	161407					

5803452

C