STANDARDS CODE 5803453

CARD CODE 5803453

RESTRICTED

SHEET 3 OF 4

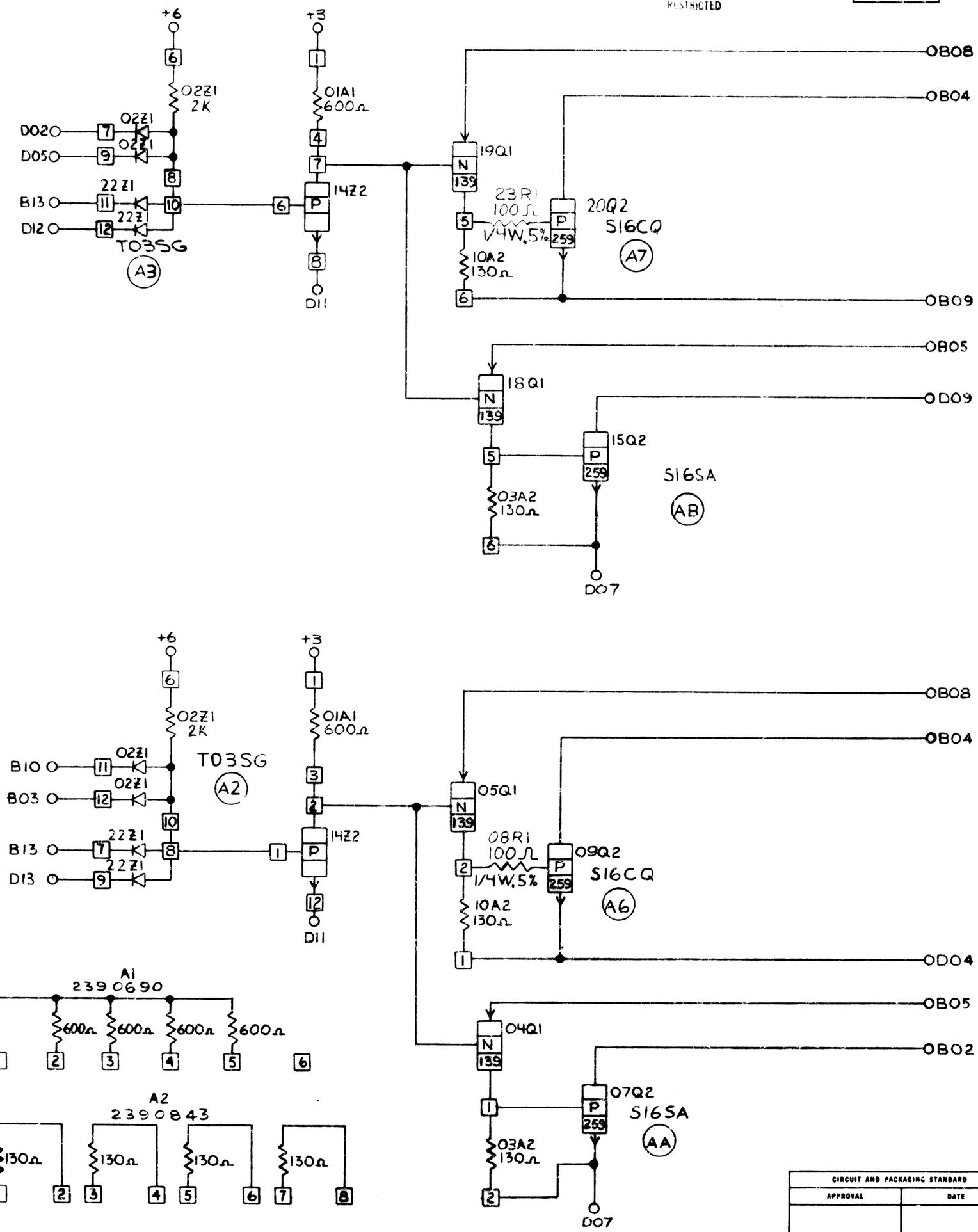

CIRCUIT AND PACKAGING STANDARD	
APPROVAL	DATE

INTERNATIONAL BUSINESS MACHINES CORP.					
NAME	4 DRIVERS & 4 GATES				
DESIGN			MODEL		
DETAIL			SCALE		
CHECK			DRAW	RDO	12-19-3
APPRO			CHECK		12-27-63

DATE	CHANGE NO.		APPROVAL	DATE	CHANGE NO.		APPROVAL	DEVELOPMENT NO.
1-17-64	DEV2102	1		21 Oct 66	168772	E		
5-6-64	160279	A						
1-13-65	162389	B						
13 MAY 66	167721	C						
13 JUN 66	167724	D						

5803453

C

C. S. CO., NO 27490 48106