5803458 STANDARDS CODE

CARD CODE 5803458

SHEET 4 OF 4

RESTRICTED

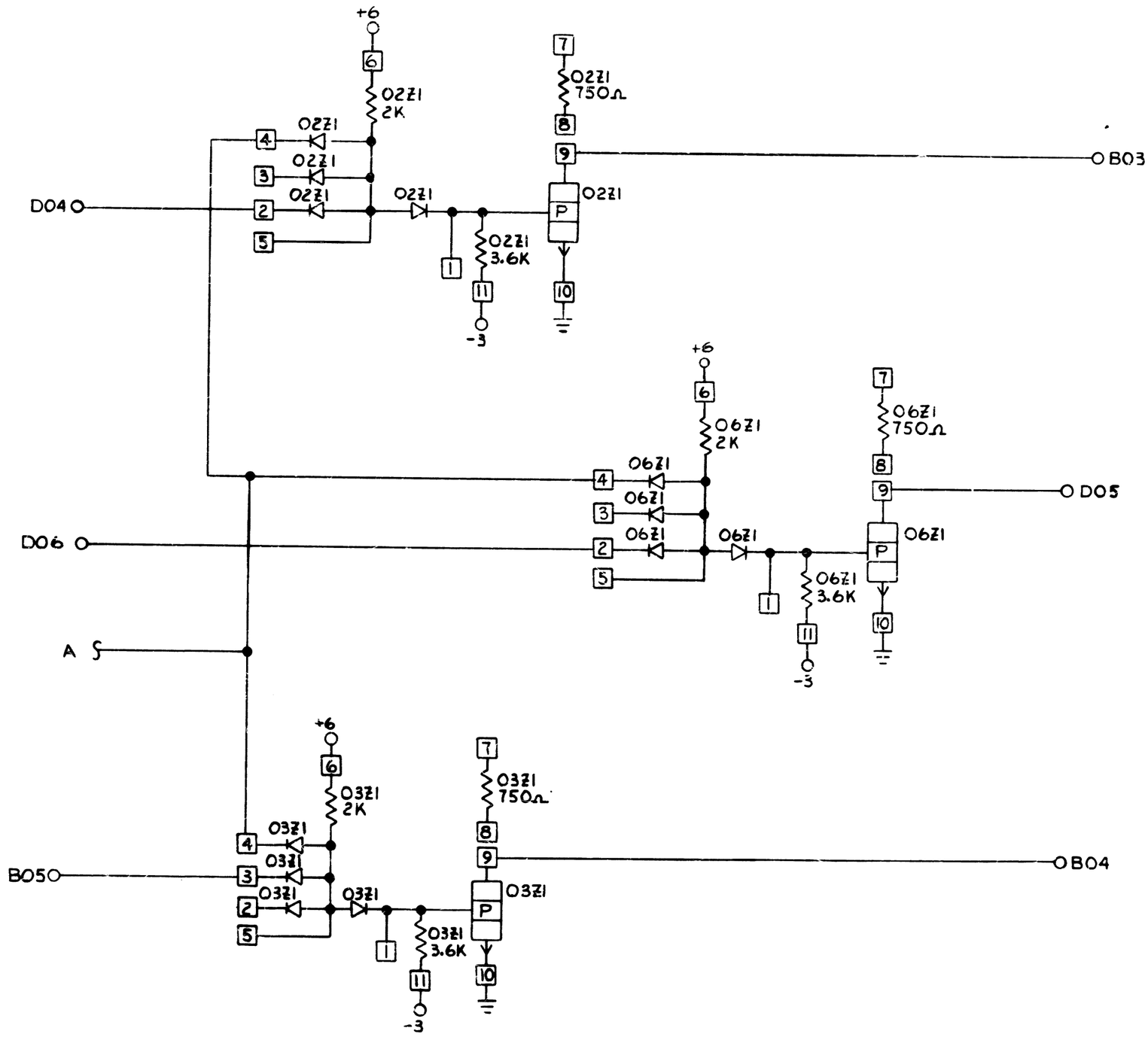


| CIRCUIT AND PACKAGING STANDARD | |
|---|---|
| APPROVAL | DATE |
| | |

| INTERNATIONAL BUSINESS MACHINES CORP. | | | | | | | | | | | | | | | | | |
|---|---|---|---|---|---|---|---|---|---|---|---|---|---|---|---|---|---|
| NAME INHIBIT GATING | | | | | | DATE | CHANGE NO. | APPROVAL | DATE | CHANGE NO. | APPROVAL | DEVELOPMENT NO. | 5803458 |
| DESIGN | KCW | | MODEL | | | | DEV 2110 | | | | | | |
| DETAIL | RO | 1-4-4 | SCALE | | | | DEV 2010 | | | | | | |
| CHECK | EC | 4-16-64 | DRAW | | | 5-4-64 | 160 272 | | | | | | |
| APPRO | | | CHECK | | | | | | | | | | |

C

C. S. CO., NO. 5709 48100