STANDARDS CODE

5803462

CARD CODE 5803462

RESTRICTED

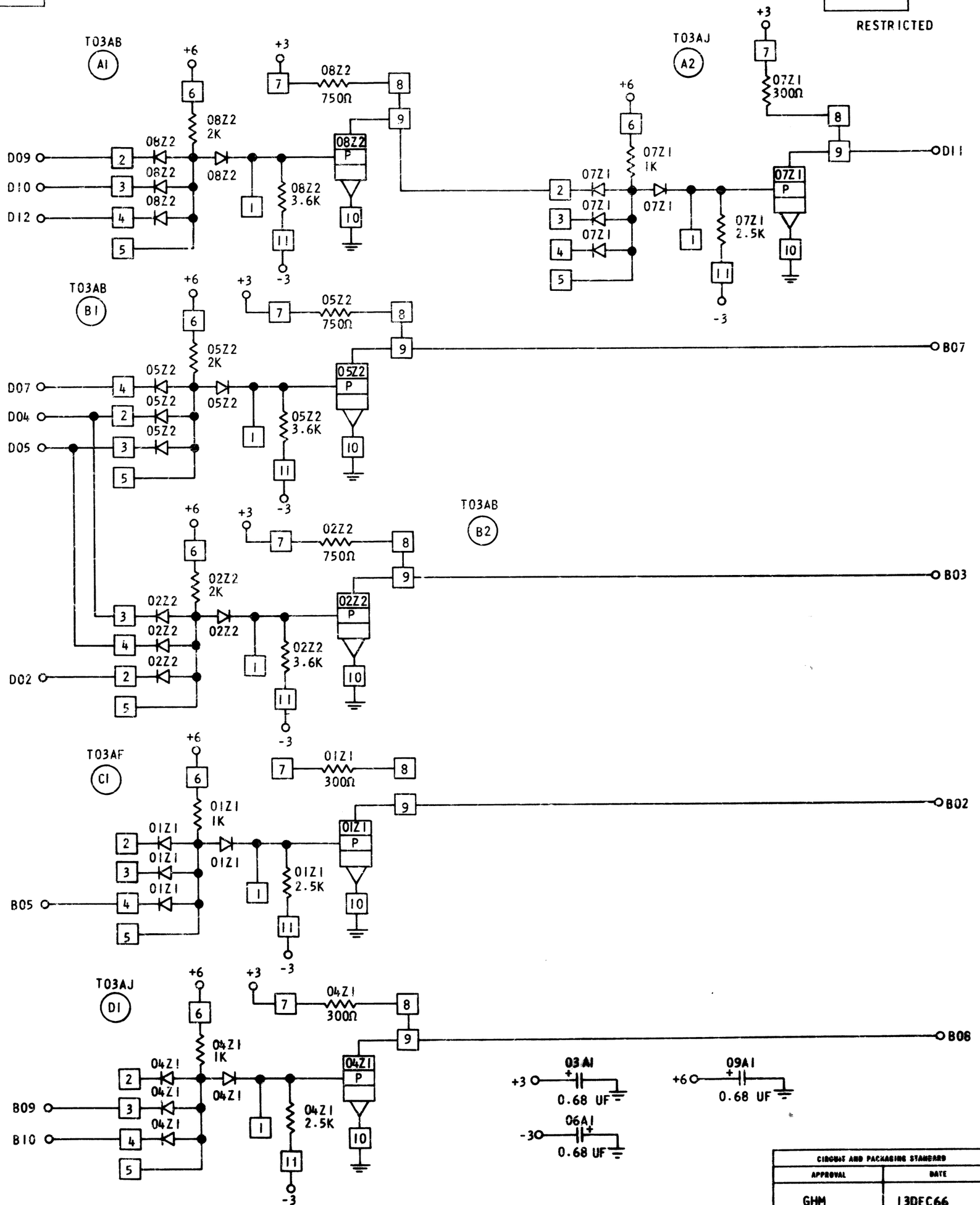

CIRCUIT AND PACKAGING STANDARD	
APPROVAL	DATE
GHM	13DEC66

[redacted]						DATE	CHANGE NO.	APPROVAL	DATE	CHANGE NO.	APPROVAL	DEVELOPMENT NO.	5803462
NAME	TIMING					3FEB64	DEV2114						
						11SEP64	161273						
DESIGN	PS	5NOV63	MODEL	360-20		5JAN67	160254 B						
DETAIL	EGD	8DEC63	SCALE	NONE									
CHECK	YH	3DEC63	DRAW	VE	15FEB67								
APPRO			CHECK										

C

OGILVIE PRESS INC BROOKLYN 17 N Y STOCK NO 4807