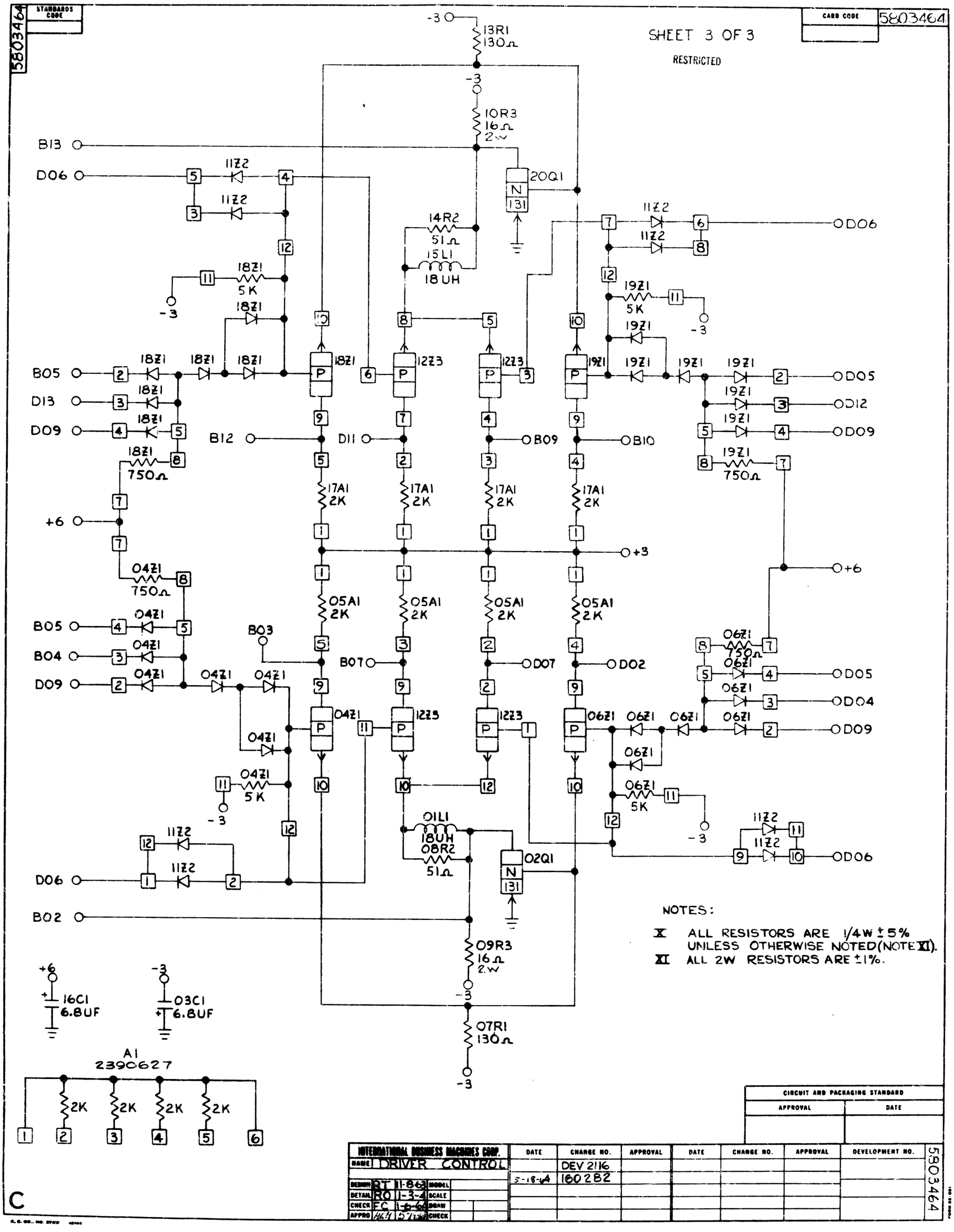
5803464
STANDARDS CODE
CARD CODE
5803464
SHEET 3 OF 3
RESTRICTED
-3
13R1
130Ω
10R3
16Ω
2W
B13
D06
11Z2
20Q1
N
131
14R2
51Ω
15L1
18UH
18Z1
5K
19Z1
B05
D13
D09
B12
D11
B09
B10
D05
D12
17A1
2K
+6
+3
04Z1
750Ω
05A1
2K
B03
B07
D07
D02
06Z1
D04
01L1
08R2
02Q1
B02
09R3
07R1
16C1
6.8UF
03C1
A1
2390627
NOTES:
X ALL RESISTORS ARE 1/4W ± 5% UNLESS OTHERWISE NOTED (NOTE XI).
XI ALL 2W RESISTORS ARE ±1%.
CIRCUIT AND PACKAGING STANDARD
APPROVAL
DATE
INTERNATIONAL BUSINESS MACHINES CORP.
NAME DRIVER CONTROL
DESIGN RT 11-863
DETAIL RO 1-3-4
CHECK FC 1-6-64
APPRO
MODEL
SCALE
DRAW
CHECK
DATE
CHANGE NO.
APPROVAL
DEVELOPMENT NO.
DEV 2116
5-18-64
160282
C