58C3466

STANDARDS CODE

SHEET 3 OF 3

RESTRICTED

CARD CODE 58C3466

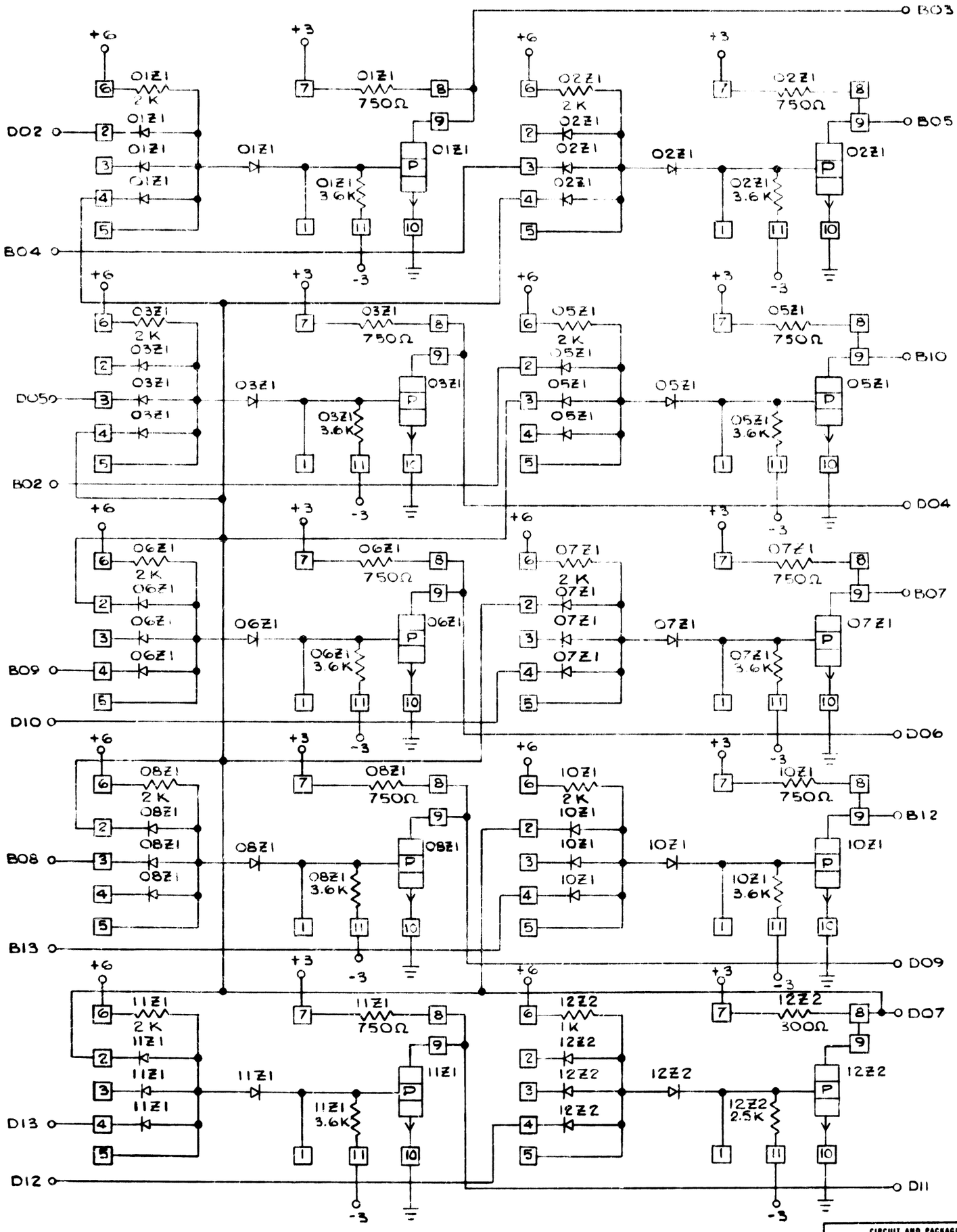

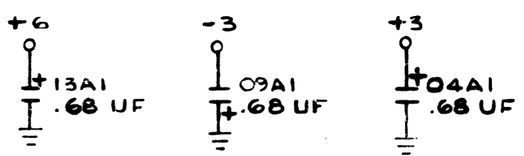

CIRCUIT AND PACKAGING STANDARD

APPROVAL	DATE

INTERNATIONAL BUSINESS MACHINES CORP.											
NAME 9-2 WAY AND + POWER INVERTER											
DESIGN PS 11-6-63	MODEL										
DETAIL RT 11-6-63	SCALE										
CHECK FC 11-6-63	DRAWN EDD 1-4-64										
APPRD MEH 11-6-63	CHECK										

DATE	CHANGE NO.	APPROVAL	DATE	CHANGE NO.	APPROVAL	DEVELOPMENT NO.
1-17-64	DEV 2118					
4-11-64	161249					
1-8-65	162723					

58C3466

C