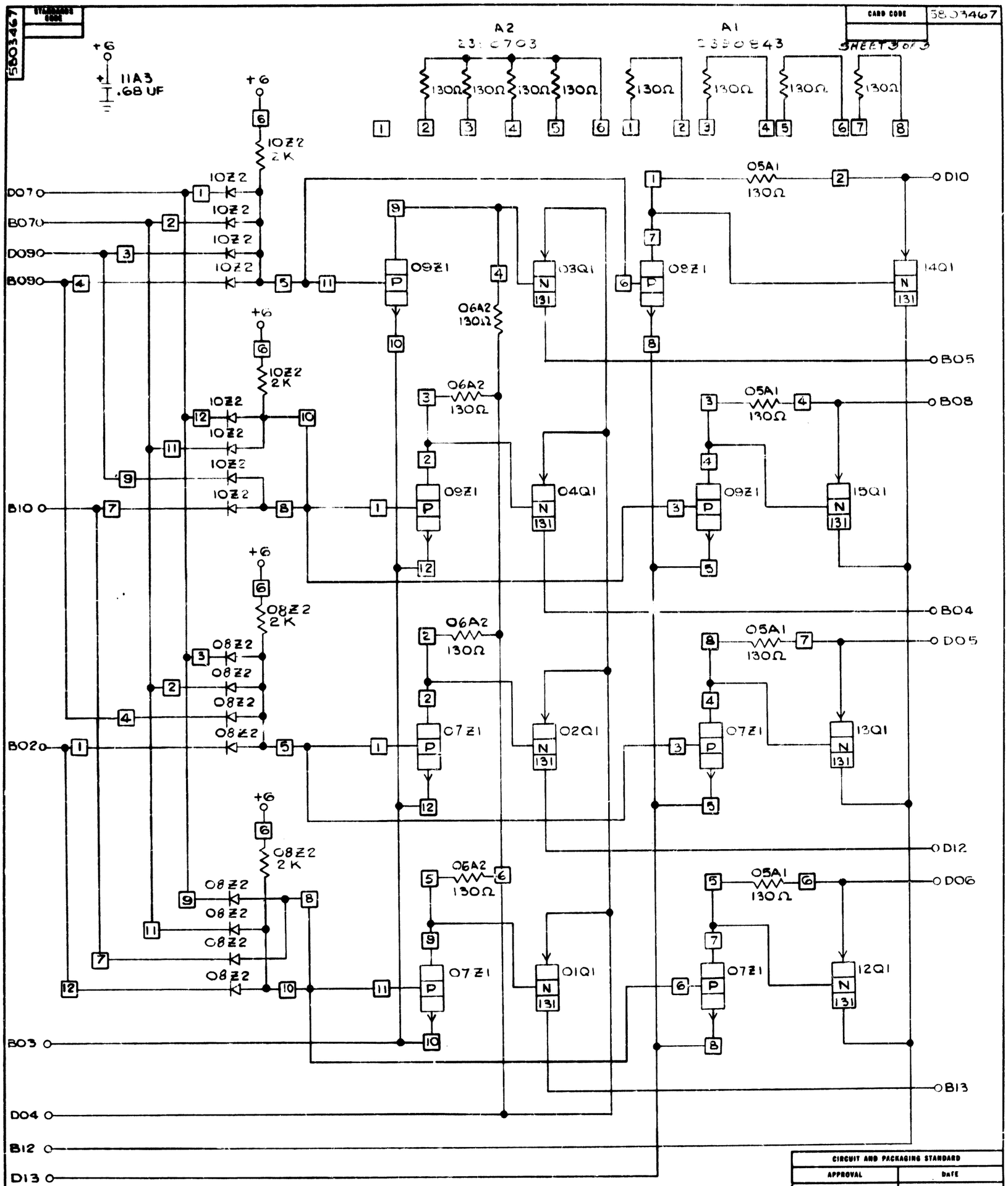


| CIRCUIT AND PACKAGING STANDARD | |
|---|---|
| APPROVAL | DATE |
| | |

INTERNATIONAL BUSINESS MACHINES CORP.

| | | | |
|---|---|---|---|
| NAME | DRIVER GATE | | |
| DESIGN | JAB 10-14-5 | MODEL | |
| DETAIL | EDD 3-4-61 | SCALE | |
| CHECK | R 4-20-4 | DRAW | |
| APPRO | | CHECK | |

| DATE | CHANGE NO. | APPROVAL | DATE | CHANGE NO. | APPROVAL | DEVELOPMENT NO. |
|---|---|---|---|---|---|---|
| 01-21-64 | DEV 2119 | | | | | |
| | DEV 2014 | | | | | |
| 05-15-64 | 160280 | | | | | |
| 5-25-64 | 160517 | | | | | |

5803467

C