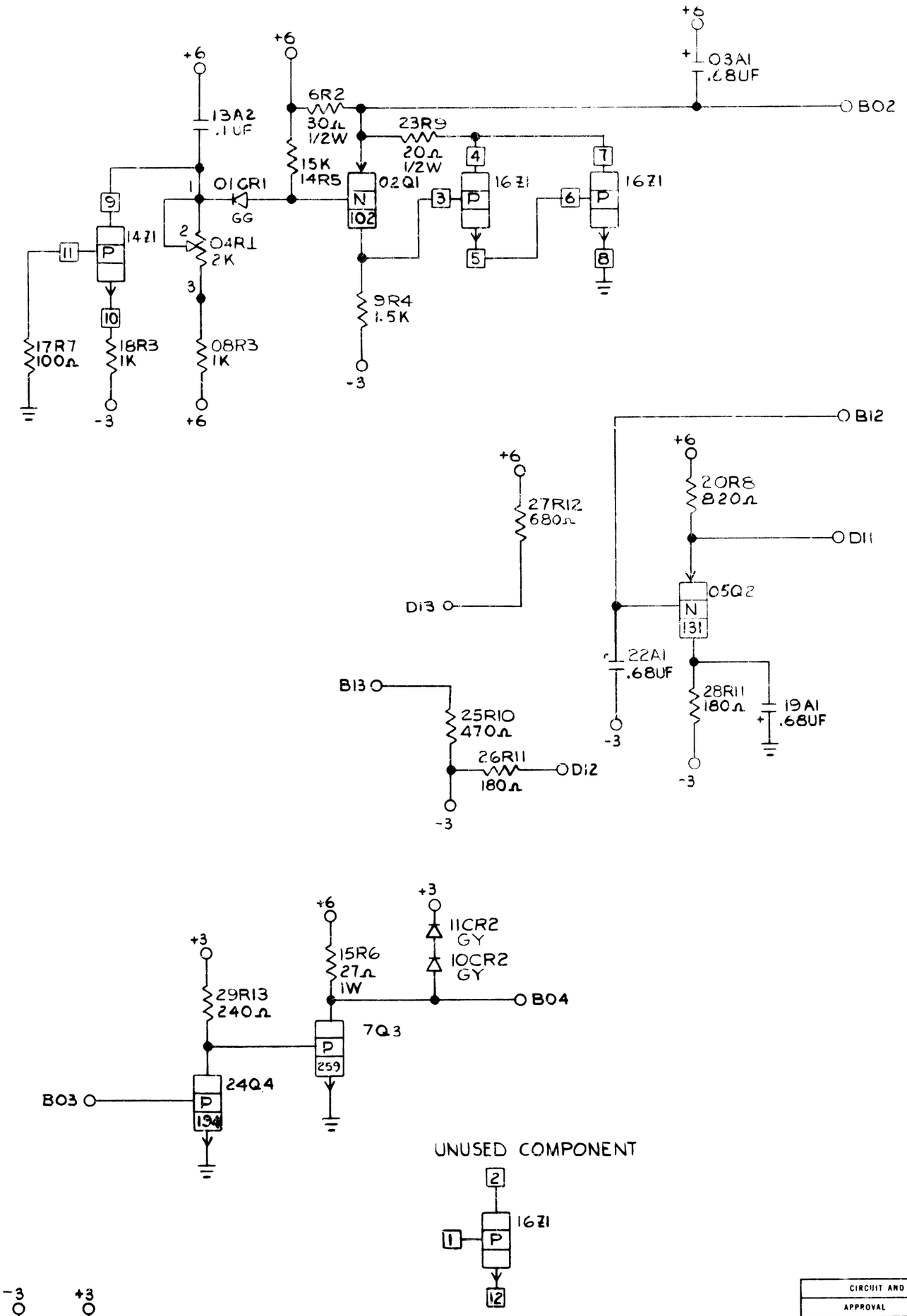

CIRCUIT AND PACKAGING STANDARD	
APPROVAL	DATE

INTERNATIONAL BUSINESS MACHINES CORP.						DATE	CHANGE NO.	APPROVAL	DATE	CHANGE NO.	APPROVAL	DEVELOPMENT NO.
NAME	SENSE IVI VOLTAGE REF STROBE AMP					1-21-64	DEV 2178		12-29-64	161685		1717 SJ
DESIGN	DM	11-7-63	MODEL									5803468
DETAIL	RO	1-[illegible]	SCALE			5-15-64	160281					
CHECK	FC	1-[illegible]-64	DRAW	RO	1-7-63	5-25-64	160359					
APPRO			CHECK	GA	1-7-63	6-17-64	160526					

5803468

C