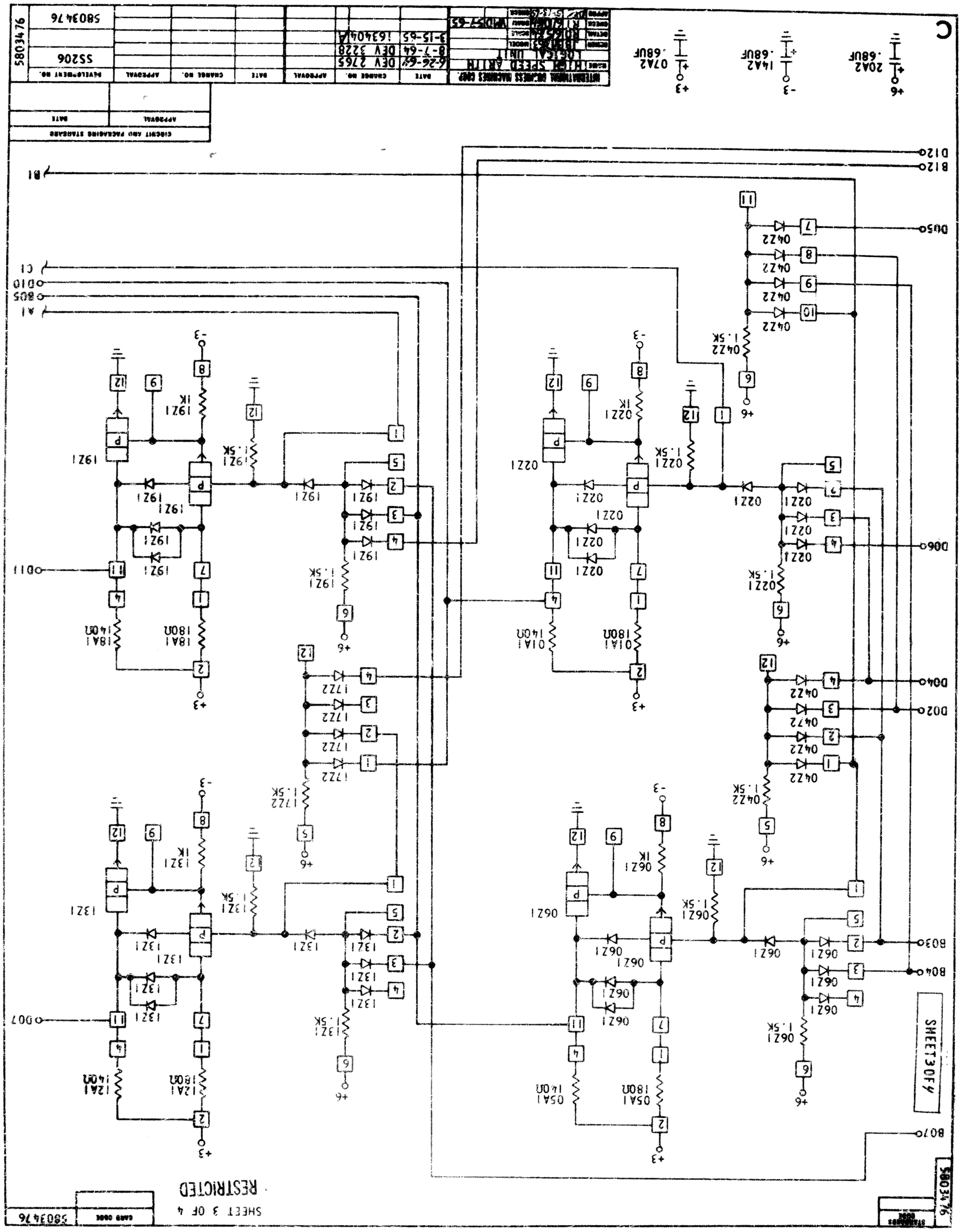
INTERNATIONAL BUSINESS MACHINES CORP.
HIGH SPEED ARITH
LOGICAL UNIT
SHEET 3 OF 4
RESTRICTED
SHEET 3 OF 4
580347 6
CIRCUIT AND PACKAGING STANDARD
APPROVAL
DATE
CHANGE NO.
REVELOPMENT NO.
SS206
580347 6
+6
-3
+3
20A2
.68UF
14A2
.68UF
07A2
.68UF
D06
D04
D02
B03
B04
B07
D05
B12
D12
B1
C1
A1
D05
D10
D11
D07
SHEET 3 OF 4